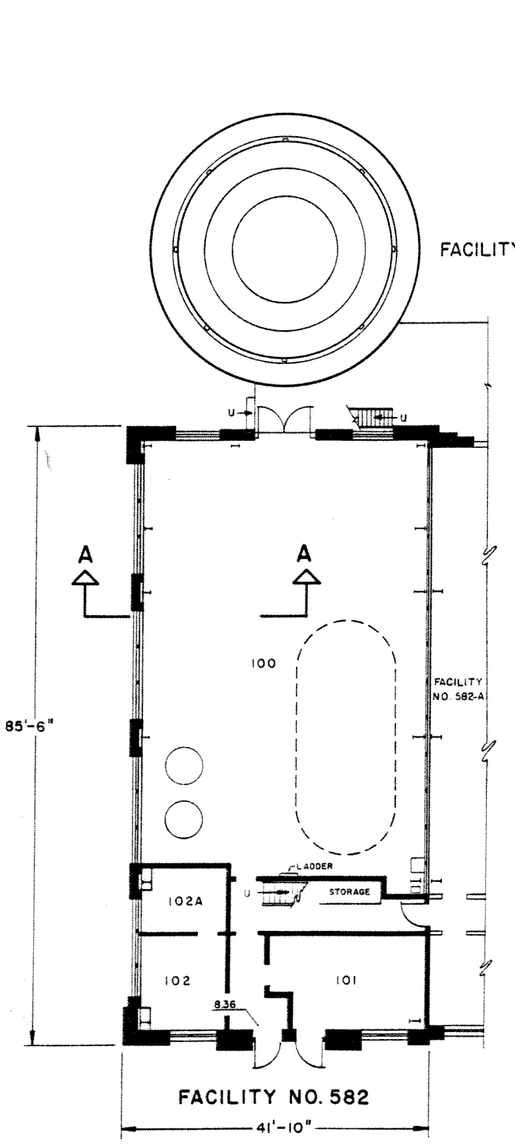

FIRST FLOOR PLAN
3,577 SQ.FT.

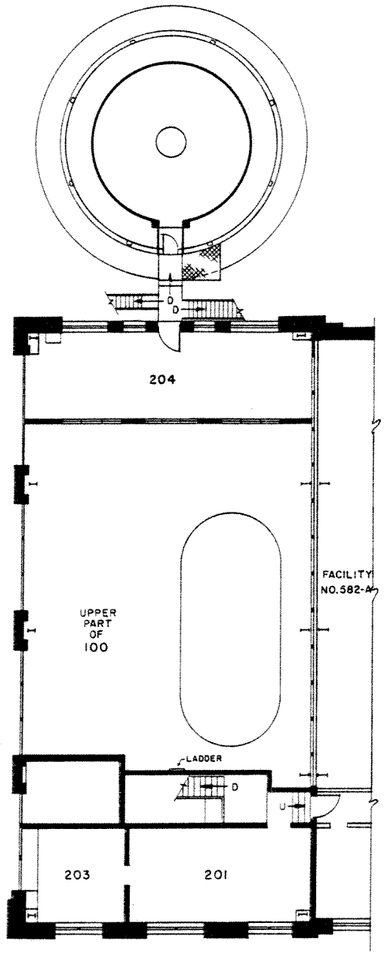

SECOND FLOOR PLAN
1,657 SQ.FT.

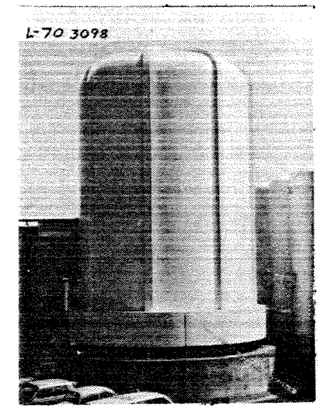

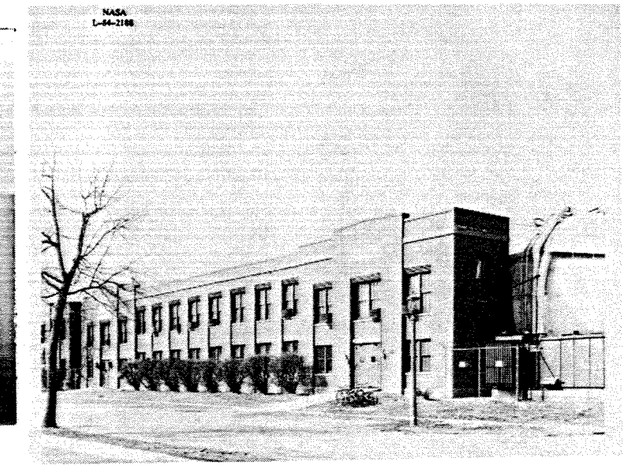

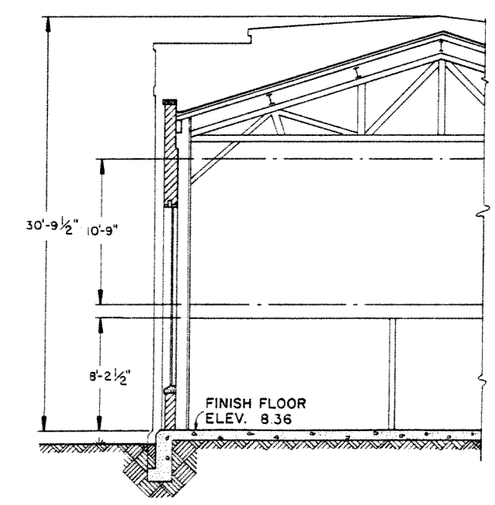

SECTION A-A

REVISED 30 DEC 83, VSE
J.G. MULQUEEN NASA TRCO

GRAPHIC SCALE — PLANS ONLY
10' 5' 0 5' 10' 15' 20' 25' 30'

ORIGINAL CONSTRUCTION: 582 AUGUST 1921
585 JUNE 1934

LANGLEY RESEARCH CENTER	E
COMPRESSOR BUILDING FOR BUILDING 585 AND 6-INCH X 19-INCH TRANSONIC TUNNEL FACILITY NO. 582 AND NO. 585	