THE DEVELOPMENT OF WINGED REENTRY VEHICLES, 1952 - 1963

by

John V. Becker

May 23, 1983

CONTENTS

	Page
Foreword	1
The Outlook in 1952	2
The Brown-Zimmerman-O'Sullivan Study	4
Bell Aircraft Company Studies of Boost-Glide Military Systems	7
The First Manned Winged "Reentry" Vehicle - The X-15	9
Ames Exploratory Comparative Study of Hypersonic Systems	12
Project "HYWARDS"	14
The NACA "Round III" Meeting at Ames on October 16-18, 1957	21
Langley Parametric Analysis of Glider and Reentry Vehicle Coolant Requirements	25
Early Manned Satellite Vehicle Concepts	27
John Stack's Attitude Towards Space Projects	31
The Last NACA Conference on High-Speed Aerodynamics, March 18-20, 1958	32
Project "Dyna-Soar"	35
SAB Review of Dyna-Soar and "Phase Alpha"	43
Rocket-Model Flight Tests Supporting DS-1	46
The Decline and Termination of Dyna-Soar	48
The Lifting-Body Diversion on the Way to the Shuttle	51
The Winged Space Shuttle	54
References	56

THE DEVELOPMENT OF WINGED REENTRY VEHICLES

1952 - 1963

Foreword

These notes review briefly, from the viewpoint of a NACA/NASA participant, the conceptual evolution and related technical advances through which manned reentry vehicles progressed from a state of questionable feasibility, through minimal ballistic capsules, to the ultimate sophistication of maneuverable, landable, reusable winged systems. Some pertinent information not found in the existing literature will be presented, together with discussion of some significant misconceptions.

The literature surrounding the impressive successes of the winged Space Shuttle quite rightly emphasizes the development of the reusable ceramic tile heat protection system, the enormous boosters, and the elaborate automatic flight-control systems. Little is said, however, about the aerodynamic design features and the modes of operation during reentry; these were established some 20 years before the first Shuttle orbital flight and have been so widely accepted for so long that they are now taken for granted. But it was not always so, and these notes record how the optimal design features and modes of operation evolved and eventually became established.

The author spent most of his professional career in high-speed aerodynamics with NACA and NASA from 1936 to 1974, serving as a research division chief from 1947 to 1974. After retirement from NASA he was active as a consultant, and during this period he authored two previous documents of a historical nature: The High-Speed Frontier, NASA SP-445, 1980, and A Hindsight Study of the NASA Hypersonic Research Engine, a study prepared for the Propulsion Division of NASA/OART in 1976 (unpublished).

The Outlook in 1952

The overriding real-life focus for hypersonics research in 1952 was the problems of the various long-range missile concepts. Our Hypersonics and Gas Dynamics groups at Langley, which had been formed in 1945 and 1948, were busily engaged in general exploratory hypersonic aerodynamics and heating research, and in occasional specific missile configuration testing for RAND and others. Our principal tool was the Langley 11-inch hypersonic tunnel which was this country's first hypersonic facility, conceived and proposed in 1945, and operated successfully at Mach 6.9 for the first time in 1947. Our Gas Dynamics Laboratory, which contained several hypersonic nozzles, came into operation a few years later, in the early '50's. In the late '40s, Ames also became involved in missile-related research, and in the early '50's H. J. Allen completed his famous "blunt-body" contribution. Many of us had read the Sanger-Bredt papers, and more recently the first progress reports on the studies of military manned boost-glide systems being undertaken at Bell Aircraft. These documents were most stimulating, but there was such a multiplicity of enormous technical problems that these systems seemed very far in the future. Manned space flight with its added problems and the unanswered questions of safe return to earth was seen then as a 21st Century enterprise. In our wildest fancies none of us visualized it actually happening, as it did, within the decade.

The 1952 recommendation of the NACA Aerodynamics Committee for increased emphasis on hypersonics research at Mach 4 to 10 had little immediate effect on the existing Langley programs, with the exception that it inspired the PARD group to evaluate the possibilities of increasing the speeds of their test rockets up to Mach 10 (Ref. 1). The

rest of us who had actually been expanding our efforts in hypersonics substantially for the past 5 years were gratified to see NACA management "getting up to speed." The final part of the recommendation "to devote a modest effort" to the speed range from Mach 10 to the speeds of space flight was responded to at Langley by setting up an ad hoc 3-man study group consisting of C. E. Brown, Chairman, from my Compressibility Research Division; C. H. Zimmerman of Stability and Control; and W. J. O'Sullivan of the Pilotless Aircraft Division (PARD). The Brown group was asked to assess the problems, develop research program ideas, and, following the suggestions of Bob Woods of Bell Aircraft, to define a manned research airplane capable of penetrating the hypersonic flight regime. The group met periodically for several months and then disbanded. Their report was circulated internally in June of 1953 (Ref. 2).

The Brown-Zimmerman-O'Sullivan Study

Outside of our two small groups in the Compressibility Research Division, very few others at Langley in 1952 had any knowledge of hypersonics. Thus the Brown group filled an important educational function badly needed at that time. In the process they had to educate themselves, since none of the three had any significant previous background in hypersonics. When Floyd Thompson told me of his plan to set up such a group, I suggested adding one of our hypersonic aerodynamicists and also a budding specialist in hot-structures from the Structures Division. Thompson rejected the suggestion saying that he was looking for completely fresh unbiased ideas and had picked three individuals who had previously shown much originality in their respective fields; they would ask for help from the experts when they needed it.

The Brown group made an interesting review of the potentialities of hypersonic systems at speeds up to orbital and they became interested especially in the commercial possibilities of the boost-glide rocket system for long-range transport, a scheme not previously explored to any extent in the literature. As regards needed research programs they rejected the traditional use of ground facilities and indicated that testing would have to be done in actual flight where the true high-temperature hypersonic environment would be generated. To do this they suggested extending the Wallops-Island rocket-model technique to much higher speeds with possible test model recovery in the Sahara. In response to their directive to consider a manned research airplane to follow the X-2, they endorsed an earlier proposal of Dave Stone to extend the X-2 to the Mach 4 to 5 range, a proposal shortly rejected by the Research Airplane Panel.

Listening to Brown summarize the study early in 1953 our hypersonic specialists felt a strong sense of deja-vu, especially at his pronouncement that "the main problem of hypersonic flight is aerodynamic heating." Nevertheless this was timely education in the basics for the uninitiated in Langley and NACA headquarters managements. Fortunately the group's conclusion that flight testing, rather than ground-based approaches, would have to be relied on for hypersonic R&D, which proved to be quite wrong, did not slow the progress of any of our developing ground techniques. As everyone in the business now knows hypersonic ground facilities generally do not attempt to simulate the high-temperature features of the hypersonic environment at the higher speeds; however, it has proved possible and quite practical through the principles of partial simulation in a variety of ground facilities both to advance basic technology and to support the development of uniformly successful hypersonic systems ranging from ICBM's to the Space Shuttle (see Ref. 3, for example). Selective flight testing, usually of the final article, is often desirable just as it has always been throughout aircraft history - but ground-based techniques - rather than flight - remained the primary tools of hypersonic R&D.

The original plan to have the Brown Group's results reviewed by an inter-center Board was never carried out.

Several misconceptions regarding presumed connections of the Brown Group's study with subsequent projects have appeared in the historical literature which need to be corrected. This New Ocean for example states on p. 57 that "the Langley Study group which had been working on the problem since 1952," - presumably the Brown group - was the source of NACA's proposal in July of 1954 leading to the X-15. Actually, as

has been documented in full detail in Ref. 4, the X-15 concept originated in a 1954 study by Becker, Faget, Toll, and Whitten which made no use whatever of any of the Brown group's study. This misconception, which has arisen on other occasions, probably has its roots in the careless and incorrect wording found in the "NACA Views" document of August 1954 (Ref. 5), where no clear distinction was made between the Brown group of 1952 and the X-15 group of 1954. Written in the slanted officious style typical of the promotional literature of federal agencies the NACA Views contains other inaccuracies, for a notable example, the statement on page 2 that "independent studies" at the other NACA Labs "were markedly in agreement (with Langley's pre-X-15 study) concerning feasibility, goals, . . . and general arrangement of the airplane." The truth is that Ames favored a military-type air breather for Mach 4 to 5. The Lewis Lab recommended against a manned airplane (Ref. 4).

Another unwarranted claim is seen in A New Dimension, NASA Ref. Publ. 1028, on p. 288 where author Shortal states that the Brown group study "excited Langley interest" in a boost-glide system follow-on to the X-15 "to become known as Round III and later as the NACA/USAF Dyna Soar Project." As one of the 2 or 3 individuals at Langley most deeply involved in these later boost-glide programs I can state positively that their origins sprang solely from military applications and interests. At most the Brown group study provided Langley with useful background education. The commercial transport version of boost-glide that the Brown trio visualized did not survive in later studies (see NASA SP-292, p. 429-445).

Bell Aircraft Company Studies of Boost-Glide Military Systems

Walter Dornberger, former German Army Commander of Reenemunde who was hired by Bell after the war, directed a succession of studies at Bell which had great educational value for the NACA and the Air Force. Essentially these were greatly advanced and improved Sanger concepts incorporating advanced technology and greater technical depth. Of special value and interest were Bell's new structural concepts, due largely to Wilfred Dukes' group - the first hypersonic aircraft hot structures concepts to be developed in realistic meaningful detail. These included wing structures protected by non-load-bearing flexible metallic radiative heat shields or "shingles", cabin structures employing both passive and active cooling systems to keep the interior temperatures within human tolerance, and water-cooled leading-edge structures. Bell recognized that there were enormous gaps between their preliminary concepts and actual realization, and like most of their contemporaries in the fifties they usually recommended "vigorous" research programs to fill the gaps.

Periodic progress reports of the Bell Studies of the 1950-'57 period were circulated to the interested NACA research groups, including the Brown group, the X-15 group, and the Round 3 groups. Unfortunately, they were usually classified "Secret" by the Air Force and thus were generally not used as references in NACA reports, which ordinarily were classified "Confidential" or lower. With little question Bell's "BOMI", "BRASS BELL", and "ROBO" studies provided the principal stimulus for USAF interest in boost-glide systems culminating in 1956 in USAF's proposals for the HYWARDS research program and later for the Dyna-Soar program. The rapid

expansion after 1954 of NACA studies of boost-glide systems and hypersonic glider aerodynamics heating, and structures was greatly stimulated and benefited by Bell's work on these military systems.

The First Manned Winged "Reentry" Vehicle - The X-15

Dr. Dryden used to liken the X-15's great elliptic excursion out of the atmosphere into space to the leap of a fish out of water. Our original intent was to create a period of 2 to 3 minutes of weightlessness for a first exploration of the effects of this characteristic feature of space flight. But as the Langley study of March 1954 progressed we soon realized that the problems of attitude control in space and the transition from airless to atmospheric flight during reentry were at least equally significant to the weightlessness question (Ref. 4). And as time went on the dynamics of the reentry maneuvers and associated problems of stability, control, and heating emerged as clearly the most difficult and significant of the entire program (Ref. 3).

The X-15's reentry problems were similar in all important respects to those of the Space Shuttle: the transition from space reaction controls to aerodynamic controls; the use of high angles of attack to keep the dynamic pressures and the heating problems within bounds; and the need for artificial damping and other automatic stability and control devices to aid the pilot. These automatic systems were in an early stage of development in the '50's and the X-15 pilots had to contribute piloting skills beyond those required in the Shuttle operation. Any advantage over the Shuttle reentry accruing from the lower speed of the X-15 tended to be offset by the much steeper reentry paths of the X-15. The pioneering X-15 reentry systems and their derivatives and the X-15's reentry flight experiences led directly to the systems and techniques employed in the Dyna-Soar and later in the Shuttle. The reaction control system used in the X-15's space leap also found application in the

Mercury, Gemini, and Apollo systems.

An interesting facet of the original heating analysis of the X-15's reentry from its "space leap", made by Becker and Peter F. Korycinski, under forced draft in their long work days of March and April, 1954, is worth noting. We discovered that Mach 7 reentry at low angles of attack was impossible: the dynamic pressures quickly exceeded by large margins the limit of 1000 lb/sq. ft. set by structures considerations, and the heating loads became disastrous. However, we found that these problems were solvable by using sufficient lift during reentry - the higher the angle and the associated lift the higher the flight altitude and the lower the peak dynamic pressure and the lower the heating rates. The reduced L/D's characteristic of the higher angles of attack reduced the times of exposure to high heating rates, thus reducing the reentry heat loads as well as the heating rates. On reflection it became obvious to us that what we were seeing here was a new manifestation of H. J. Allen's "blunt body" principle. As we increased angle of attack our configuration in effect became more "blunt", disipating more of its kinetic energy through heating of the atmosphere and less in the form of frictional heating of the vehicle. Clearly Allen's concept was as meaningful in our high-lift X-15 reentry as it was in the non-lifting missile cases he had considered in 1952.

The figure in ref. 4 which depicts the trajectories and vehicle altitudes which were found feasible from the heating standpoint shows that dive brakes could be employed in conjunction with lift to increase drag and further reduce L/D in order to ease the heating problem - again in accord with Allen's "Blunt-Body" concept. Unfortunately the limited treatment of the heating studies reported in ref. 4 did not

include all of the implications of high-lift high-drag reentry. These details were discussed, however, in most of the oral presentations we made throughout 1954. The problems of how to make the X-15 configuration stable and controllable in the high-angle-of-attack (11 to 26 degrees) regime involved in its "reentry" trajectory outweighed the heating considerations at that time. Nevertheless our heating analysis provided the first clear detailed insights into the reentry heating problems of winged vehicles and their possible solution by use of combined high lift and high drag. This new knowledge was invaluable in our later work on the "HYWARDS" and "Dyna-Soar" projects in which we extended studies of high-lift and high-drag reentry to near-orbital speeds for delta wings operating at angles of attack up to 45°.

Ames Exploratory Comparative Study of Hypersonic Systems

This 1954 study (Ref. 6) was started at about the same time as the pre-X-15 work at Langley. It was concerned solely with sub-orbital long-range flight and did not consider orbital operations or reentry. H. J. Allen made the first review of their results a year and a half later in November 1955 at the Langley Conference on High-Speed Aerodynamics. In retrospect the study was interesting and important on three counts:

1) Its comparisons of rocket and air breathing systems.
2) The unveiling of the Ames so-called "flat-top" drooped-wing-tip glider for intercontinental ranges.
3) The finding that the simple, blunt-shaped, ballistic capsule was the optimal vehicle from an energy standpoint for very long ranges (semi-global or greater).

In regard to item 3 Allen liked to explain, "For very long ranges it is better to <u>throw</u> it than to <u>fly</u> it." Of course, his ballistic vehicle had some unpleasant characteristics: high deceleration rates and the necessity of an uncontrolled parachute landing if it were to be recovered.

Over four years later after much additional study and new technology for satellite reentry had been added by Industry, by Langley, by Ames, and by others, a "final" version of Ref. 6 - having the same title but much embellished - was published as NACA TR 1382. The authors of <u>This New Ocean</u> (pp. 66-68) mistakenly assumed that all of the insights acquired by 1959 in this study were at hand in 1954. It should be noted

especially that the desirable features and operational techniques of winged satellite reentry vehicles did not exist either in the 1954 study or in Allen's 1955 review.

What is true and what should be noted by historians is the fact that the studies of hypersonic glider systems by Bell, Langley, Ames and others in the early '50's were a most pertinent and important prelude to the successful satellite reentry vehicle technology developed later in the decade. In many respects the environmental and operational problems of reentry from orbit along a shallow (gradually descending) trajectory are quite similar to those of the sub-orbital glider system. Thus X-15, HYWARDS, and Dyna-Soar were important precursors of the Shuttle. And Allen's sub-orbital ballistic system of 1954-55 led directly to the project Mercury concept.

Project "HYWARDS"

We were surprised in March, 1956 to learn from the ARDC staff at Andrews AFB that USAF was establishing a specific project to develop a research airplane successor to the X-15. After one of the Bell Aircraft Company briefings on their ROBO study we NACA invitees were told that USAF/ARDC management was determined never again to find themselves unprepared as they were when NACA proposed the X-15 and gained technical direction of the X-15 project. USAF's only specification for such a new research vehicle at that time was "a rocket glider with a speed of about Mach 12." "HYWARDS" was the acronym for this hypersonic weapon and R and D system.

Although we were very busy at Langley in the spring of 1956 with supporting research for the X-15, it was obvious that the question of a successor merited high-priority attention. F. L. Thompson immediately set up an ad hoc inter-divisional study group patterned directly after the X-15 group. It was larger, however, and had more time to fulfill its task. The principal members of our "HYWARDS" study group were:

J. V. Becker, Chairman; also leader of the Heating Analysis group

M. Faget, Propulsion & Configuration

L. Sternfield, F. J. Bailey — Stability, Control, Piloting

I. Taback, Instrumentation, Range, Navigation

R. Anderson, P. Purser — Structures, Materials

P. Doneley, Loads and Flutter

A. Vogeley, Operations and X-15 Coordination

P. Korycinski, Coordination; Heating group

As the work progressed a number of others were added, notably

P. Hill, Configuration, Propulsion

E. Love
M. Bertram } Configuration, Aerodynamics, Stability & Control

As a starting point we decided to focus on a design speed of Mach 15 for purposes of analysis, not at all sure that it would prove feasible, but believing that it was about the lowest speed for which an attractive military boost-glide mission could be defined. Perhaps the most important recommendation in our first formal report of the study on January 17, 1957 (Ref. 7) was that the design goal should be raised to 18000 feet per second or about Mach 18. We had learned in our heating analysis that at this speed boost gliders approached their peak heating environment. The rapidly increasing flight altitudes at speeds above Mach 18 caused a reduction in heating rates; at satellite speed, of course, on the outer fringe of the atmosphere the heating rates became negligible. Mach 18 was an enormous step beyond the X-15, requiring new developments in every area of applicable technology. Promising general concepts for these developments were formulated; however, in many areas, especially in high-temperature internally-cooled structures, we were confronted by enormously complex development problems. Our expressed hope that such a system could be developed and ready for flight in 5 years appears, in retrospect, to be far too optimistic.

Our proposed vehicle system embodied advanced glider prototype concepts both aerodynamically and structurally. The heating analyses carried out by Becker and Korycinski had revealed major advantages for a configuration having a flat bottom surface for the delta-wing, and a fuselage located in the relatively cool shielded region on the top or lee

side of the wing - i.e. the wing was used in effect as a partial heat shield for the fuselage and its critical contents. This "flat-bottomed" design had the least possible critical heating area for a given wing loading and this translated into least circulating coolant, least area of radiative heat shields, and least total thermal protection in flight (Fig. 1). In these respects the configuration differed importantly from the previous Bell designs, which employed mid-wing arrangements. This was the first clear delineation of the possibility of aerodynamic design features which could significantly aleviate the heating and ease the hot-structures problems. Later application of these principles to actual flight systems was first made in the Dyna-Soar program, and they are also obviously applied in the current Space Shuttle.

In the major review of our HYWARDS study for Langley top management on January 11, 1957 Becker also discussed operation of the Langley glider if boosted to the near-orbital velocity required for once-around or "global" range. Using Fig. 2 he pointed out that the maximum-L/D mode of operation resulted in much more difficult temperatures and heating loads than if the glider were operated at half its maximum L/D and high angles of attack. Still further alleviations would be expected if the vehicle were operated at its maximum lift ($L/D \sim 1$, 45° angle of attack) (Ref. 8, copy attached). High L/D operation made sense only for the shorter ranges.

During the period in 1955 when the work statement for the X-15 design competition was being formulated at Langley I had received several phone calls from A. J. Eggers at Ames expressing concern that the work statement did not specify very high aerodynamic efficiency

(i.e. very high Lift/Drag ratio). They proposed to add to the X-15 design problems the enormous complications that would have been involved to make it an advanced prototype of their early notions at that time of what the ultimate long-range glide vehicle should look like. I protested that this would delay the procurement unacceptably without adding materially to the research products envisioned for this exploratory penetration into the realm of manned hypersonic flight. Soule and NACA HQ personnel agreed.

When "HYWARDS" appeared in the spring of 1956 the Ames group saw at last an opportunity to promote their penchant for high Lift/Drag and they set up a study group consisting of A. J. Eggers, G. Goodwin, R. Crane, H. J. Allen, L. Clausing and others. Their proposal (Ref. 9) called for a speed of Mach 10 which produced a range of only about 2000 miles even though their glider was designed for the highest conceivable hypersonic Lift/Drag ratio (about 6). To favor high L/D they made use of the favorable interference lift that occurs when the pressure field of an underslung conical fuselage impinges on the wing. In this concept, unfortunately, the entire fuselage with its critical special cooling requirements was located in the hottest region of the wing flow field - on the high pressure lower surface where added thermal protection weight was required. Although the Ames report virtuously stated that the configuration should be "capable of the highest possible Lift/Drag ratio consistent with . . . (other requirements)" it was apparent to us that actually their configuration had 'the highest possible L/D without regard for the other requirements.' The drooped wing tips of the Ames configuration were supposed to add slightly to the L/D but their use did

not survive later careful evaluations in the Supersonic Transport programs.

A comparison of the Ames and Langley vehicles initially proposed for HYWARDS is seen in Fig. 3. A rather noticeable feature of the Langley design is the large cones attached to the elevons. These were proposed by E. S. Love to provide sure effectiveness for both directional and longitudinal stability and control at the higher speeds. They were shortly discarded in favor of separate toed-in tip fins and rudders which proved better from the L/D and heating standpoints.

Aside from the questions relating to the "flat-top" arrangement, the least supportable feature of the Ames proposal was the low design speed they recommended, about Mach 10. Eggers made a mild attempt to justify this speed at the first meeting of the Steering Committee for these Research Vehicles on February 14, 1957 (Ref. 10). Shortly after this meeting, however, Ames decided to accept our reasoning for 18000 ft/sec, and on May 17th they forwarded a Supplemental Report describing their 18000 ft/sec system (Ref. 11). High L/D was still retained as the primary feature of their new design.

Ames' predilection for high-L/D needs to be explained. The possibilities for combining aerodynamic bodies - wing and fuselage in particular - so as to produce beneficial aerodynamic interference effects had become one of the most intriguing aspects of configuration research in the late '40's and early '50's - stimulated perhaps by the great success of Whitcomb's Transonic Area Rule developments. A number of researchers at Ames were deeply involved in the improvement of supersonic configurations through favorable interference. At the same time Ames did not have a significant effort in high-temperature structures

and heat protection. This area of research was centered at Langley. Thus the Ames emphasis on high-L/D in the hypersonic research airplanes was simply a reflection of their established primary research interest rather than any special understanding or analysis of the real-life trade-offs that must be made between high-L/D, structural height, and, especially for hypersonic aircraft, heat-protection-system weight.

NACA management was now faced with the problem of how to deal with these two distinctly different configuration philosophies. To provide some needed background information and at the same time promote our Langley ideas in which I believed strongly, I constructed Fig. 4 for discussion at a major presentation to Langley management in May 1957. Based on analysis of the range equation for a circular earth, the results showed that due to the large centrifugal lift at Mach 18, the traditional aerodynamic efficiency factor, Lift/Drag, has less than half of the relative effect on range that it has at low flight speeds. At the same time, aircraft weight, which is increased by high L/D, retains the same large importance that it exerts at low speeds. To further stress the point I prepared Fig. 5 showing that for the extreme case of once-around or "global" range an L/D=1 vehicle required only a slightly higher boost speed than the L/D=4 vehicle. More importantly, the L/D~1 vehicle, operating at its maximum lift angle of attack (45°) had greatly reduced heating problems, and this meant that it could be smaller and lighter than the L/D~4 vehicle. This result, of course, came as no surprise to us at Langley since we had discovered the heating advantages of high-lift low L/D operation in our X-15 study as mentioned previously. This was the first specific delineation of an important

principle of operation later employed in the Dyna-Soar and Space Shuttle systems.

A "NACA Views" document for the HYWARDS study (Ref. 13) was written at Langley, chiefly by key members of the Langley team, during the late spring of 1957. In the interests of peace and brotherhood both the Langley and Ames vehicles were included, to illustrate two alternative approaches, "low-heating" and "high-L/D." Editing by Soule and Mulac at Langley and Clotaire Wood in NACA HQ strove for fine impartiality. A number of presentations of the content of this document were made during the spring at Langley, Ames, NACA HQ, and at the Pentagon on July 11. General Putt and Dr. Dryden indicated that further steps towards an advanced program of this kind were in order, but should be taken with discretion so as not to jeopardize the X-15 program which was still having funding problems.

The NACA "Round III" Meeting at Ames

on October 16-18, 1957

The intent of this gathering was to permit detailed discussion and coordination of the work of the four NACA Laboratories relating to HYWARDS, at the working level and at upper management levels as well. It was very much needed because of the strong differences of opinion which had developed, particularly in regard to the glider configuration concepts. In the "Views" (Ref. 12) it was stated that the Ames high-L/D approach would have a range advantage of some 1300 miles <u>if launched at the same speed</u>, 18000 ft/sec, as the Langley glider. However, it was easy to show by simple engineering calculations that the glider weight penalty associated with the higher L/D would, for equal system weights, nullify this range advantage. This important fact had been edited out of the "Views" in the interest of harmony.

Reflecting on the above as objectively as possible, I realized that both the Ames and the Langley designs were probably far from optimum. We had simply selected "reasonable" but arbitrary values for wing loading, skin temperature, etc. A truly optimized vehicle - in which the trade-offs among the key variables had been systematically evaluated - might have different proportions, features, and R&D problems. It was rather foolish for both groups to be so vociferously wedded to their present configurations. I decided this was the most important point I could make at the Round III meeting. To make the point convincingly I analyzed the effects on the performance of the Langley glider due to changes in wing size and wing loading. The results were dramatic: by using a wing 40 percent smaller the range of our glider system was

increased from 4700 to 5600 nautical miles (Fig. 6). The L/D with the smaller wing was reduced about 14 percent, but this was far outweighed by the associated 4000 lb reduction in glider empty weight. I concluded that we should concentrate not on increasing L/D by every known means, but rather on seeking "optimized" configurations which generally would have much smaller wings than the high-L/D designs.

By the time of the Round III meeting we had also eliminated Love's high-drag tip cones - substituting toed-in tip fins - and thus making the range of our system with both improvements 6900 nautical miles, or more than 1000 miles greater than the claimed performance of the Ames "high-L/D" design.

These results and other details of the Langley study were included in my summary talk at the first Round III session on October 16th (Ref. 13,14). The ideas were accepted with little question.

Many of the Ames people had begun to realize that design for very high L/D was frought with enormous technical problems of heating and structural heat protection which had no easy practical solutions (Ref. 15). But a still more compelling new development of crisis proportions had captured the interest and imagination of all of us - Sputnik I was orbiting overhead. Now, only some 11 days after its launch, we all felt mounting pressures to come to grips with the problems of manned satellites, particularly the critical reentry problem. The Ames view expressed by Eggers and others said in effect, "NACA should be working on the satellite reentry problem rather than on the HYWARDS sub-orbital gliders. Very low L/D should suffice for satellite reentry and this will make the technology much easier to develop than that for the gliders."

It should be noted here parenthetically that the ideas of pure ballistic and slightly-lifting wingless hypersonic vehicles did not emerge for the first time in NACA thinking at the Round III meeting as has been suggested (Ref. 15). "Lifting bodies" without wings had been studied since the early '50's by both Langley and Ames. It had been abundantly demonstrated in the prior ICBM developments that ballistic operation generally minimized the heat load problem, and it was equally well understood that the high decelerations of ballistic reentry could be greatly alleviated by small L/D, in the range achievable by blunt wing-less bodies (see for example Ref. 6 and This New Ocean). The new contribution of the Round III meeting was the NACA decision to take on satellite reentry as a major new challenge for research.

Ames also in effect said "We have lost interest in the sub-orbital glide systems and believe we should focus all of our R&D activities on satellite systems, for which we no longer need high L/D." The Majority view expressed by I. H. Abbott of NACA HQ was that the satellite reentry problem for non-lifting or only slightly-lifting vehicles should be studied, but as an addition to the boost-glide system rather than an alternate (Ref. 13). Notwithstanding this management dictum Ames terminated its hypersonic winged vehicle work shortly after the Round III meeting and devoted all of its energy to the low-L/D lifting capsule. Their hypersonic winged glider concept was left stranded in the early conceptual state indicated in Fig. 3, and they never moved ahead to winged reentry vehicles. In fact, as we will see later, they developed a strong antipathy to such vehicles. Thus, within NACA, it was left entirely up to Langley not only to pursue winged gliders and winged

reentry vehicles technology, but also to provide the logic and the promotional support for winged systems.

Immediately after the first day of the Round III meeting I came down with the flu. Henry Reid and Pete Korycinski kept me informed of the later sessions at my bedside at the motel. I had plenty of time to reflect on Sputnik which had been launched 12 days earlier and which was passing overhead periodically, announcing the advent of the Space Age. However, at that time the boost-glide sub-orbital system seemed much more immediate and more urgent from a military point of view than satellites either manned or unmanned. The Dyna-Soar project had been proposed by USAF/ARDC only 2 months earlier, and would not be approved until the month after Round III, still specified as primarily aimed at boost-glide applications in spite of due consideration by USAF of the implications of Sputnik (Ref. 16).

At the same time my optimization study for Round III had convinced me that the "NACA Views" vehicles we had recommended were far too large and too complex for an effective new research airplane system. I resolved to take a fresh new look upon returning to Langley.

Langley Parametric Analysis of Glider and Reentry Vehicle Coolant Requirements

The most disturbing feature of the large boost-gliders proposed in the "NACA Views", by far, was the large weight of internal coolant they carried and the complex internal systems required to circulate the coolant to large surface areas. We all realized from the outset, of course, that the use of a circulating coolant was a highly undesirable complication, but our structures group saw no alternative pending the future development of a better high-temperature material, which at that time was often referred to as "unobtainium." The required coolant for each of NACA's hypersonic vehicles prior to 1958 had been determined on an ad hoc basis using the particular wing loading, skin temperature, etc., assumed for each case. It was clear by mid-1957, however, that the problem was of such controlling importance that a systematic, parametric analysis revealing the influences of the key variables was justified. P. F. Korycinski and I initiated such an analysis about two months prior to Round III. Exciting preliminary results were realized early in November 1957, and a final report of the work was published early in 1959 (Ref. 17). We found that skin temperature exercised an enormous over-riding effect on the coolant required, which increased inversely with skin temperature raised to the 16th power! The conservative peak skin temperature for HYWARDS advocated by our structures group, 1800° F, required very large coolant weights. However, a nominal rise in allowable temperature to 2200° F, which was not beyond reasonable expectations for improved metallic or ceramic surface materials, completely eliminated the need for surface coolant except for the small-radii wing leading

edges of the high-L/D gliders. That is, radiation from the hot wing surface would balance peak frictional heating for skin temperatures of 2200° F. For global-range gliders or delta-wing reentry vehicles, which required maximum L/D's in the range of only 1 to 2, leading edge radii of the order of 6 inches are permissible, and our analysis revealed especially interesting results for these winged vehicles, if they were designed to operate at high angles of attack approaching maximum wing lift in the peak-heating region of their glider or reentry trajectories: For a peak skin temperature of only 2000° F no coolant whatever was required. To achieve this result a flat-bottom wing large enough for a wing loading of the order of 20 lb per sq. ft. was required, operating near its hypersonic maximum lift coefficient of 1, at an angle of attack of about 45 degrees. This high-lift operation of course produced a high-altitude reentry trajectory - near the upper limit of the corridor for practical vehicles. Thus it was possible later on, in the Dyna-Soar project, to design the metallic DS-1 vehicle with zero skin coolant. And in the current winged Space Shuttles, which use advanced ceramic tiles capable of surface temperatures well in excess of 2000° F, (Ref. 18), the same result is enjoyed with considerable relaxation of the wing loading and other limiting design variables.

After this study no further consideration was given to internally-cooled glide or winged reentry vehicles. The cumbersome and impractical vehicles advocated in the "NACA Views" were now obsolete and conveniently forgotten.

It should be recorded here that Glen Goodwin of Ames carried out a parametric analysis of glider cooling generally similar to ours, at about the same time. Neither of us had seen the other's study until we met to

discuss possible papers for the forthcoming 1958 High-Speed Aerodynamics Conference. Goodwin proposed to give a summary paper but Langley argued that a detailed discussion of cooling was now unnecessary since the real message of these studies was that cooling could be avoided for both long-range gliders and reentry vehicles. This all-important result could be treated in the papers dealing with the individual vehicle concepts. Thus, the Goodwin cooling paper was dropped from the agenda, and to the best of my recollection the Ames study was never published.

Early Manned Satellite Vehicle Concepts

Pressures to develop technology for a manned satellite continued to grow and soon enveloped the military services and their contractors. USAF initiated studies of "Manned Ballistic Rockets" in 1956; initially sub-orbital missions were considered for comparison with the boost-glide system but now (in the fall of 1957) the focus was shifted to the minimal orbital mission referred to as "Man-in-Space-Soonest" (MISS). At least 11 contractors studied as many concepts and we soon became aware of their problems by visits and calls from the company people involved.

In November of 1957 I made a first crude attempt to apply the results of our coolant study to the design of a minimal one-man satellite vehicle (Fig. 7). I selected only enough L/D (about 3/4) to insure low deceleration and nominal lateral maneuverability. The vehicle would be landed by parachute. Its wing loading, quasi-flat bottom, and other features were chosen to permit metal skin temperatures no higher than 2000° F at the peak heating point in its reentry, with zero internal coolant. John Stack took this sketch to a meeting of the High-Speed Aerodynamics Committee in November 1957. However, there is no evidence that he ever used it, and if reentry vehicles were discussed at wll it would probably have been in unrecorded pre-meeting discussions with the other NACA members.

By the time Stack had returned from his Committee meeting I had found that for only a small increase in weight a far more attractive winged reentry vehicle could be achieved, one capable of much greater range control and conventional glide landing while still retaining the advantage of zero coolant. The general specifications for such a vehicle were stated and illustrated specifically in my paper on winged reentry vehicles

given the following spring at the last NACA High Speed Conference, which will be covered later in these notes.

The early concepts developed by the 11 "MISS" contractors emerged in late January 1958 at an Air Force briefing which I was invited to attend. Figure 8, summarizing the concepts, is taken from my report of the meeting upon returning to Langley. Seven of the concepts were ballistic, with McDonnell showing a shape similar to what eventually became Mercury, obviously benefitting from their contacts with Faget. The four winged vehicles with L/D's ranging upward to 6, showed the general lack of understanding in the Industry at that time of how the winged hypersonic glider could be greatly simplified and its mode of operation altered to facilitate reentry. The Ames concept of a blunt lifting half-cone with L/D of about 1/2 at this time was in its earliest formative stage - too early to have been utilized by the MISS contractors even if they had been interested in it.

Historians and lay readers should not be confused by the multiplicity of aircraft-like vehicle configurations appearing in the semi-technical literature of the '55 to '65 period under the general subject heading of "Space Transportation System Studies." Vehicles carrying hundreds of passengers and cargo to and from orbit were often depicted in detail by imaginative artists. The main interest of nearly all of these studies centered on the propulsion system and the "cost-per-pound-in-orbit" of operating the system. The enormous problems of reentry were not treated except for arbitrary and usually meaningless weight allowances for mythical "guidance and control" systems or equally non-existent "heat protection systems." Obviously none of these studies contributed anything towards solution of the reentry problem.

Of greater significance were a number of unconventional reentry schemes that appeared in the years following Sputnik. Most of these attempted to alleviate the reentry heating problem by using extremely low wingloadings or, in the case of ballistic designs, very low disc loadings, i.e., very large surface areas which permitted higher attitude reentry trajectories. These schemes included inflatables, erectable kite-like arrangements, and a variety of other variable-geometry inventions. More often than not the heating problems were treated inadequately. Some of the more interesting schemes are depicted and assessed in Ref. 19 and 20. None ever materialized in any actual application.

John Stack's Attitude Towards Space Projects

It should be noted parenthetically that Stack was not really much interested in the reentry problem or in space flight in general. The X-15 promotion was the only space-related project that he clearly supported in the '50's, to the best of my recollection, but even so with only a semblance of the notorious promotional fire he could generate if he was really interested. His main enthusiasms in the '50's were the SST and advanced military aircraft. To a degree he seemed to have developed a hostile, adversary attitude towards Space, perhaps because it threatened to drain resources that otherwise might belong in aeronautics. When the Apollo project was established he sneeringly told me, "I don't buy this 'to the Moon by noon' stuff." Noting the enormous sizes of the rocket boosters ("like the Washington Monument"), he sided with the abortive early attempts to find viable air-breathing aircraft-like launch systems. After leaving NASA and going to Republic he continued to favor advanced aircraft as opposed to Space projects. All of the developments discussed in the present document, i.e. X-15, HYWARDS, Round III, Dyna-Soar, the Langley reentry concepts, etc. took place with little or no technical or managerial inputs from Stack. Most of them were under the aegis of H. A. Soule - who wore a NACA HQ hat labeled "Research Airplane Projects Leader." However, this fact would never have deterred Stack from all-out participation if he had been interested.

For one with his previous record in the forefront of high-speed aircraft developments Stack's decision to remain in the aeronautical camp and glare at the dramatic space developments as they were accomplished by others is one of the most curious personal enigmas in NACA history.

The Last NACA Conference on High-Speed Aerodynamics, March 18-20, 1958

Since the mid-forties NACA's periodic conferences on High Speed Aerodynamics had successfully high-lighted the agency's most advanced research in aeronautics for Industry-wide audiences of as many as 500 specialists. This final meeting under the NACA banner focused principally on manned satellites; vehicle concepts and supporting technology. Any historian who doubts NACA's virility in its last days or its ability to respond quickly, fulfilling both advisory and research functions in a truly outstanding way, should read the Conference document (Ref. 21) and interview a sampling of those who attended.

As originally planned at a meeting in NACA headquarters on December 16, 1957 the agenda did not include any papers dealing explicitly with reentry vehicle concepts. Supporting technology was included in several papers to be given on the second day. Some of Faget's work with the ballistic concept was mentioned, but it was buried in a general discussion of operational problems. Following traditional NACA policy to the effect that the development of aircraft designs was properly the province of Industry, nothing else was to be said about vehicle concepts.

The week following this HQ meeting one of the contractors responding to USAF's "Man-in-Space Soonest" study visited me to discuss his candidate reentry vehicle, an L/D ~6 winged glider, forcefully impressing on me the need for NACA to discuss winged reentry vehicle concepts at the forthcoming conference. Right after the holidays I called on Bob Gilruth, who was coordinating the Langley papers, with a proposal to prepare such a paper. He was in full agreement, and he pointed out that Faget's study also

deserved to be a separate paper. Not to be outdone, Ames then proposed to add a paper covering their L/D~1/2 half-cone approach. These three conceptual vehicle papers were programmed for the first session, immediately following Chapman's analytical study of reentry mechanics and heating.

My paper on the winged concept opened with a brief discussion of the general unsuitability of high-L/D gliders as reentry vehicles. L/D's in the range 1 to 2 were shown to be adequate for both g-alleviation and range control. A general comparison of the relative heating of lifting and non-lifting reentry emphasized the large reduction in both heating rates and heating loads made possible by low L/D, high-lift operation of winged vehicles. Included in the comparisons was the case of a conventionally-shaped fighter-type aircraft reentering at 90-degrees angle of attack, i.e. as a non-lifting or ballistic vehicle which converted to conventional flight for low-speed range and landing. This mode of operation, feasible in principle, did not appeal to me because it retained most of the crudities of ballistic vehicles and sacrificed the advantages of lift, except for approach and landing. Nevertheless I included this concept (top of Fig. 9) for the sake of completeness and out of deference to my friends in the Flight Research Division, some of whom were interested in it. The paper concluded with the small configuration (bottom of Fig. 9) which embodied all of the features we now advocated on the basis of our HYWARDS work and our coolant study: L/D in the range 1 to 2 for range control, hypersonic maneuvering, and inherent capability for conventional glide-landing; radiative solution of the heating problem by operation near maximum wing lift; use of large leading edge radii, flat-bottom wing, and fuselage located in the

protected lee side of the wing. Roger A. Anderson of the Structures Division provided the structural design and weight estimates for this minimal winged satellite, and E. S. Love assisted with the aerodynamic layout. The estimated all-up weight was 3060 lb., only about 1000 lb. more than the minimal ballistic capsule.

This paper created more industry reaction - almost all of it favorable - than any other I had written. If we had had a more energetic booster than Atlas at that time the first U.S. manned satellite might well have been a landable winged vehicle.

Project Dyna-Soar

The source evaluation and selection activities for the Dyna-soar research and test vehicle (DS-1) afforded major opportunities in the spring of 1958 for NACA to influence the program and the vehicle concept. In broad terms the declared intent of DS-1 was "to research the characteristics and problems of flight in the boost-glide flight regime up to and including orbital flight." We in NACA thought of DS-1 as a follow-on X-15, covering the speed range from Mach 7 to near-orbital speed. I had been appointed NACA Co-chairman, Scientific and Technical Area, serving with my opposite number, USAF's W. E. Lamar, who also headed the entire evaluation exercise. I found Lamar to be a shrewd, able, effective manager. We soon developed an excellent rapport and exercised a controlling influence on the outcome of the evaluation.

Our background experiences with X-15, HYWARDS, Round III, and the winged reentry vehicle study had established in my mind very clear desirable guidelines for the DS-1 vehicle which were now quite different from the official "NACA Views" of Ref. 12. In the NACA/USAF meeting of the source evaluation groups in late March at Wright-Patterson AFB I put forward the following ideas relating to DS-1:

1) Instead of the large high-L/D, structurally complex, water-cooled glider recommended in the NACA HYWARDS study of 1957, DS-1 should be a small L/D$\sim$2, relatively simple, radiation-cooled vehicle. Such a small simple vehicle could be procured much more quickly, with less risk, and would greatly ease the booster problem.

2) A DS-1 vehicle in the L/D $\sim$2 category would serve equally as an advanced prototype for the semi-global-to-global-range,

boost-glide system (for which low L/D is actually preferable) and for the future maneuverable, landable, space reentry system (for which L/D~2 is also the likely category). Research-wise this class of vehicle would be more valuable than the high-L/D glider which was applicable only to glide ranges of the order of 1/4-global.

There were two problems with my new views: they had no official status in NACA as yet, and they were at variance to the boost-glide work statement to which the contractors would be responding in the present source selection exercise. Nevertheless these views were discussed with great interest by many of the USAF and NACA members of the evaluation groups and they apparently had an effect on the outcome of the evaluation.

Of the nine contractors bidding on DS-1 only one offered a small vehicle in the L/D~2 category. Boeing's design, however, was charged with several flaws (top of Fig. 10): their use of features which aggravated heating and their too-optimistic heating estimates, among others. Martin and Bell had teamed to submit a higher-L/D mid-wing design. Their proposal, overall, was rated close to Boeing's primarily because of Bell's obvious depth of experience in hot structures, acquired in their previous boost-glide studies. USAF decided on June 16, 1958 to accept the recommendations of the Source Selection Board to continue both Boeing and Martin/Bell in a Phase I competition for the ensuing 9 months during which revised and improved designs would be advanced to the mock-up stage. Both teams were briefed on the new design features now recommended by the NACA/USAF DS-1 group.

Boeing's Phase I efforts produced an entirely new design incorporating all of the government recommendations in a wholly satisfactory way

(Bottom sketch of Fig. 10). Their new L/D 2 vehicle had a flat-bottom wing, nose tilt for trim, toed-in tip fins, fuselage on the upper surface of the wing in the protected "hypersonic shadow" at reentry attitudes, large leading-edge radii, and radiation-cooled structure with no internal surface coolant. Martin/Bell developed a still lower-L/D vehicle with somewhat similar other features. Figure 11 is the free-hand chart used during the Phase I design evaluations in April 1959 to compare the glide corridors and associated research aspects of the two vehicles - Boeing having the edge here with a broader meaningful corridor exploration potential. In all other respects except propulsion Boeing was judged the more desirable system. Martin, however, was continued as the booster developer, primarily because of their involvement with the Titan.

At this stage DS-1 seemed to be everything that NASA desired. This, we believed, was the research airplane that would extend the flight spectrum from the X-15's Mach 7 on up to orbital speed, and the research data would be equally applicable to boost-glide and sophisticated reentry systems. NASA top management had readily accepted the drastic changes in the configuration described above; however, they never formally repudiated the large high-L/D water-cooled gliders advocated in the NACA-Views (Ref. 12).

Several of Langley's research divisions became heavily committed to supporting projects bearing on the prime development problems of Dyna-Soar. The contractor negotiated directly with appropriate Langley staff members for wind tunnel and other testing and then cleared the plans with the Dyna-Soar project office at Wright/Paterson AFB. My long-time colleague, P. F. Korycinski, had been assigned to the project office as NASA's official representative, and he was effective in expediting the

support work. In the next three years some 3900 hours of wind tunnel testing (NASA-wide) were accomplished throughout the broad speed range of DS-1. Unnumbered additional hours were devoted to testing in specialized facilities related to problems in hot structures, landing system, dynamic leads, panel flutter, noise, heat transfer, communications through the plasma sheath during reentry and others. Analytical and theoretical work essential to these experimental projects absorbed added prime manpower. Much of the fruit of these programs was, of course, of specific use primarily to Dyna-Soar; but a significant part proved of general fundamental value and was reported in general research papers. Reference 20 contains a substantial sampling of the results in hand by April 1960, two years after the initial source selection.

It is desirable at this point to identify the principal Langley individuals who contributed to Dyna-Soar. Starting at the top, F. L. Thompson provided relaxed, shrewd general management which allowed great freedom at the divisional and project levels. His assistant, H. A. Soule, who also served as Research Airplane Proj cts Leader for NASA Headquarters, handled effectively the day-to-day top management of Dyna-Soar. When Stack moved up to his Washington office position in 1959, he was succeeded by L. K. Loftin, Jr. as an assistant to Thompson. Unlike Stack, Loftin showed much interest in Dyna-Soar and he participated in the front-office activities along with Thompson and Soule. As Chief of the Aerophysics research division where a major part of the Langley support work for DS-1 was centered, I was naturally involved in all phases of the program. I was often also called upon to be the technical spokesman for the entire Langley program, although no formal annointing for this function was ever made.

Following is a list of the principal Langley contributors to winged reentry vehicle technology in the '58-'63 period. These are individuals shown by their publications or other evidence to have made noteworthy personal technical contributions. I am aware of the hazards in setting up such a list. If there are any omissions, in spite of the care I have taken to include everyone, I offer my apologies.

Principal Langley Contributors to Winged Reentry
Vehicle Technology, 1958-'63

Hypersonic aerodynamics, configuration, stability and control

M. H. Bertram

M. Cooper

D. E. Fetterman

A. Henderson, Jr.

E. S. Love

C. H. McLellan

M. Moul

J. A. Penland

W. H. Phillips

R. W. Rainey

L. Sternfield

Heat transfer

I. E. Beckwith

J. C. Dunavant

W. V. Feller

P. F. Korycinski

Aeroelasticity, dynamic loads, panel flutter, launch vehicle dynamics, landing system dynamics, noise

S. A. Batterson

L. D. Guy

J. C. Houbolt

H. H. Hubbard

U. T. Joyner

H. G. Morgan

A. G. Rainey

H. L. Runyan

Low-speed flight characteristics

D. E. Hewes

J. R. Paulson

R. E. Shanks

Trajectory analysis

F. C. Grant

Reentry communications (blackout problem)

J. Burleck

M. C. Ellis

W. L. Grantham

P. W. Huber

R. A. Hord

D. E. McIver, Jr.

T. E. Sims

Hot structures, materials

M. S. Anderson

R. A. Anderson

W. A. Brooks, Jr.

L. R. Jackson

E. E. Mathauser

R. A. Pride

R. T. Swann

Doubts about Dyna-Soar first began to surface during the summer of '59. To many Air Force R&D specialists the growing prospects of military operations in space were more exciting than boost-glide operations in the atmosphere. I learned first hand from my USAF contacts of another disturbing point of view - said to be shared by General Schriever - to the effect that NASA's Project Mercury was believed likely to fail, making it necessary for USAF to put the first American in orbit. This reasoning was based partly on the Vanguard fiasco, and partly on Schriever's alleged belief that NASA's use of ex-researchers to manage Mercury was a mistake. Researchers supposedly were inept at management and operations. USAF, on the other hand, would succeed because of their BMD know-how and experience. In the event of such a USAF take over, Dyna-Soar would be the candidate vehicle for the first manned orbital flight, and as such should it be a sophisticated winged system or a simpler semi-ballistic system that would be quicker to develop and perhaps more reliable?

J. Charyk, Assistant Secretary, had become a believer in USAF's future in space and he was influential in instituting the so-called "Phase Alpha" study in November 1959 at about the same time that formal

USAF approval for DS-1 was obtained. Phase Alpha asked the DS team in effect to "take another broad look and see if you really want a winged vehicle or whether you can do better with a ballistic or slightly-lifting type." The intent here, was clear: if another type of system could be shown to have important advantages DS would be re-directed and everything that had been done to support winged system technology would be set aside. Probably there would be no manned explorations of the glide corridor in the Mach 7 to orbital speed range.

USAF space advocates had found an important ally within NASA. Since the Round III meeting where he had proposed to work exclusively on slightly-lifting capsule-type reentry vehicles A. J. Eggers, Jr., had been cultivating a growing personal distaste for winged reentry vehicles. As he saw it the problem of placing sizable payloads in space was aggravated by having to cope with the added weight of wings - especially with the marginal boosters then available. What about lateral range, hypersonic maneuvering, conventional landing, etc.? His answer was "If USAF has a real reason for boost-glide or maneuvering reentry and conventional landing - OK. <u>But</u>, if what they <u>really</u> want is the maximum possible payload in space then they should use a simple light-weight semi-ballistic reentry system." He spread this doctrine very effectively and it doubtless contributed to USAF's decision to proceed with "Phase Alpha." As a member of the Aero and Space Vehicles Panel of the SAB, Eggers had many opportunities to hammer away against winged reentry configurations.

SAB Review of Dyna-Soar and "Phase Alpha"

The five members of the Aero and Space Vehicles Panel and 11 consultants, mostly from Industry, met at Ames Research Center for 3 days, December 2-4, 1959, for this review. They listened to presentations by the DS project office and by NASA. Those of us involved in the project believed that a major threat to our L/D ~2 winged system existed, and we anticipated that Eggers might attempt to strike a mortal blow.

Realizing that his L/D~1/2 blunt half-cone reentry vehicle candidate was not likely to find a sponsor now that Faget's ballistic shape had been selected for Mercury, Eggers had recently proposed a more slender half cone the "M-2" which had an L/D of about 1, and which might conceivably be landable as a glider (Ref. 23). Its great selling point in his mind of course was that it was "wingless", a "lifting body" - even though its planform was about the same as the DS, as it would have to be if there were any hope of achieving necessary low-speed handling characteristics. In anticipation that we might hear the propaganda for M-2, I built my presentation around Fig. 12 which compared two half-cone bodies (L/D~1.5) with a DS-type wing-body of the same planform and aspect ratio (L/D ~2). We knew from low-speed testing that the wing-body shape could develop an L/D as great as 5 for low-speed approach, while the half cones would certainly have lower (then unknown) low-speed performance, perhaps about L/D~3. Thus the main virtue of the half-cones, bought at sacrifices in L/D, would be increased body volume - a useless feature in Dyna-Soar which had more than enough fuselage volume for its anticipated payloads.

I closed my presentation with a review of the impressive benefits achievable by a winged vehicle in the L/D ~2 range as covered in my 1958 conference paper, reminding the SAB that the sophisticated performance of these winged vehicles involved only a nominal weight increment of the order of 1/3 over comparable ballistic systems. This modest increment would certainly be tolerable as booster capacity advanced beyond the Atlas which was the limiting factor in selecting the small ballistic capsule for Mercury.

We were gratified when a large majority of the consultants agreed with the choice of L/D ~2 as the proper goal for DS, and this was underscored in the Panel's report (Ref. 24) which said "L/D of the order of 2 is considered correct." In the executive session held on Saturday, December 5, Chairman C. D. Perkins stated at the outset that Dyna-Soar at this point was "easily killable," that USAF wanted Dyna-Soar, and that, "SAB should help USAF." Perhaps because of this admonition, Eggers was quieter than usual and did not attempt a hard-sell of the M-1 or M-2 at this meeting.

The Panel was concerned about the adequacy of advanced technology in several areas of DS-1 design and they suggested that Phase Alpha, rather than being a "do better" exercise should concentrate on program planning to raise the confidence level. This suggestion was disregarded in the ensuing Phase Alpha study (Ref. 20) which turned out to be largely a comparison of alternate vehicle systems. However, the ground rules laid down by the Project Office were such that only a winged L/D ~2 system could possibly meet all the requirements, and thus Phase Alpha was pretty much wasted effort,* a gesture to upper management. When the

*It did produce some valuable comparative weight analyses. See page 53.

Panel met again on March 28-30, 1960 they were provided with a massive review of supporting technology, much of the key material that had been prepared for the forthcoming USAF/NASA Conference on Lifting Manned Hypervelocity and Reentry Vehicles (Ref. 20). The Panel was generally satisfied regarding the adequacy of technology to support DS-1. Significantly, however, at the end of their report (of April 15, 1960) they inserted the following statement at Eggers' instigation:

> ". . . if the overriding requirement were to get large payloads in orbit as soon as possible . . . the (L/D 1/4 to 1/2) vehicle class might well be preferred. . . . the Panel did want to be sure that the Air Force was aware . . . of this alternate. . . ."

Rocket-Model Flight Tests Supporting DS-1

After the SAB meeting of December, 1959 I was convinced of the political desirability if not of the technical necessity for a high-priority attempt to obtain flight tests data to validate questionable DS wind tunnel results in certain critical heating and aerodynamic areas. The attempts within NASA to extend the Wallops Island rocket technique to Mach 15 or higher had proved disappointing. From the standpoint of setting new PARD speed records these flights were a success (See NASA Ref. Publ 1028), but a careful review of results presented in NACA/NASA conferences shows the technical contributions to be disappointing; the flights were always subject to rapidly changing velocity and altitude conditions, little or no structural data were obtained, and the models were not recovered.

I had recently learned from colleagues on the NASA Missile and Spacecraft Aerodynamics Committee of the possibility of attaching "hitch-hike" or "piggy-back" tests to recoverable USAF/BMD RVX-2 nose-cones. (The RVX was the first ablation-protected IBM nose cone recovered after a long-range flight over the Atlantic in May, 1958). Scheduled future flights would be Atlas-boosted to reentry speeds of about Mach 22 - ideal for the critical heating and aerodynamic tests that we needed. To explore this possibility I travelled to BMD and STL headquarters in Los Angeles on February 19, 1960. George Solomon and his cohorts thought our type of add-on aerodynamic test would be feasible and urged me to proceed. Accordingly, we organized an ad hoc design group under C. H. McLellan which came up with the rather unlikely constellation of test models arrayed about the RVX-2 shown in Fig. 13. About half of the

proposed tests related specifically to the DS-1 configuration; the rest were more general experiments. It was not difficult to convince the DS project office to fund this RVX-2 payload in the DS development program in August of 1960. BMD, of course, was funding the booster. NASA/Langley agreed to provide the engineering and the instrumentation for the payload.

Another rocket test vehicle system useful to DS-1 was already under preliminary consideration in 1960 by the structures and materials groups in USAF's Flight Dynamics Lab. ASSET (Aerothermoelastic Structures Systems Environmental Tests). In the curiously detached and indifferent way in which major sub-divisions of the giant bureaucracies often ignore each other, FDL's vague and all-encompassing project description for ASSET made no mention of X-15, DS, ground facilities, or other important inter-relationships. Figure 14 is the Langley chart used to clarify the situation (the "proposed NASA experiment" is the RVX-2).

Thus by 1961 two complementary sets of unmanned flight tests important for Dyna-Soar were in active preparation.

The Decline and Termination of Dyna-Soar

NASA's influential involvement with Dyna-Soar came to an abrupt end in 1961. It was probably no coincidence that this decline started soon after General Schriever's accession as head of ARDC. The charts used by Soulé, Becker, Korycinski, and others of NASA's Dyna-Soar Team to describe this situation to Administrator Webb on January 4, 1962 are shown in Figs. 15, 16, and 17. W. E. Lamar had rather apologetically informed us during the fall of 1961 of the drastic redirection that was to be implemented in December 1961, without any participation or consultation with NASA. The series of sub-orbital manned flights down the Atlantic missile range at progressively increasing speeds, which constituted the "research airplane"-type of exploration of the boost-glide and the reentry corridor of prime interest to NASA, was entirely eliminated. Now in the interests of economy, and perhaps following the lead of Project Mercury, only two unmanned sub-orbital flights would be made, from Cape Canaveral to Edwards, prior to similar sub-orbital manned flights, and orbital flights.

USAF also cancelled their support for our RVX-2, a relatively minor but for us a particularly unpleasant act. (We subsequently made a rather half-hearted and unsuccessful attempt to continue RVX-2 under NASA funding). As far as our NASA DS team was concerned Dyna-Soar as a research airplane was dead.

During the remaining two years of Dyna-Soar's existence NASA continued as a largely inactive nominal partner, completing the tests to which we were committed. It was now obvious that USAF was interested in DS only as a prototype of an orbital system and not as a research vehicle. Whatever R&D aspects might be involved could be treated in

lesser unmanned programs like ASSET or START, according to their philosophy. As time went on it also became increasingly apparent that USAF did not have a clear believable vision of what their orbital system requirements really were, and thus doubts increased as to whether DS-1 was an appropriate development vehicle. The fact that DS was a winged system was now cited as a liability - due largely to the effective widespread anti-wing propaganda of the Ames group. "Wings are for airplanes" they said.

A few months before the final denouement the DS-1 Project Office, in desperation, called on its old partner for help. I spent a day in Washington in March, 1963 with Calvin Hargis, Milton Ames, and several others making the best case we could for saving the project. Much of the argument centered on the technology advances that would acrue. And much of it had a hollow ring. We all sensed that by now, the case was probably hopeless.

Driving back to Newport News that evening on icy roads an oncoming car skidded into my lane, wiping out my small convertible, but leaving me intact. I had suffered much in my travels for Dyna-Soar. Previously, an engine fire on take-off over San Francisco, a three-hour hold over Washington followed by a hair-raising late night landing in a blizzard, and now this!

Some valuable lessons were learned on Dyna-Soar. By the time of termination in December 1963 one could see that step-wise ascent through the glide or reentry corridors in the manner of the earlier manned research airplanes was not really essential to reentry vehicle technology advancement. For one thing the ranges became too long to be practical

as the speeds approached orbital. The great successes of Project Mercury underscored other more appropriate development procedures, and at the same time provided an enormous increase in confidence level in ground facilities and in the viable technology achieved from intelligent combination of theory and partial-simulation data from a variety of facilities.

It might be argued that Dyna-Soar should have been terminated in the fall of 1961 when it was re-oriented losing its research-airplane functions. Certainly, this would have resulted in major cost savings. (Troubled projects are seldom terminated as promptly as they should be from purely cost considerations; Ref. 25 gives an example). However, if that had been done many of the engineering developments of Dyna-Soar would have been stopped in such an early stage as to be of little value. It was the fitting of successful detailed engineering solutions into the general conceptual framework of a winged reentry vehicle that constituted Dyna-Soar's principal contribution. The NACA/NASA conceptual recommendations of 1958/59 were now tested, substantiated, and "fleshed out" in a real system.

Strong differences of opinion between Ames and Langley, which were often debated with some heat, reached their peak in the Dyna-Soar program and continued in milder form in the landable lifting-body work described in the next section. It would be quite wrong for readers to assume, however, that there were any lasting personal animosities involved here. On the contrary, this competitive situation generally increased mutual respect, stimulated thinking, and enhanced the quality and pace of our R&D work.

The Lifting-Body Diversion on the Way to the Shuttle

The solid advances in all facets of winged reentry vehicle technology produced by Dyna-Soar seemed to have limited acceptance by the aerospace community of the early sixties. Instead, the demise of Dyna-Soar was interpreted by some as a failure or repudiation of winged reentry vehicles. There was an obvious psychological reaction. Like the proverbial rats, many aerospace vehicle specialists flocked over into the "lifting body" camp in 1963.

A month before the termination of DS the AIAA had published my survey article on Entry Vehicles in which I had reviewed the cases for both winged and wingless vehicles (Ref. 26). I pointed to the relatively undeveloped state of technology of the lifting bodies, particularly in the areas of low-speed aerodynamics, handling qualities, heat protection, and related weights. Although I personally was still strongly biased towards the winged approach, it seemed obvious that we now must develop and assess the lifting bodies in serious detail in order to provide a firm basis for choice.

A 1963 chart which I used in several "reentry" talks is reproduced in Fig. 18. It suggests that the lifting-body concept is a hybrid deriving features from both aircraft and missile developments. Figure 19, with a 1967 perspective (Ref. 27), enlarges on these relationships with more detail, and with the addition of a time scale. (It may be noticed that a lifting body of extreme slenderness and hypersonic L/D of "3" is mentioned for completeness in Ref. 27 and Fig. 19 to indicate the upper possible limits. As shown on Fig. 19 such shapes would have to

utilize switch-blade wings or other special devices for low-speed flight and landing.)

E. S. Love, R. W. Rainey, B. Z. Henry, and others in Langley's hypersonic and configuration groups undertook the development of a flat-bottom, delta planform ligting body, starting in late '62. They sought a vehicle which would offer improvements over the Ames M-2, the most highly-developed concept up to that time. In particular they were aiming for a large fraction of usable volume, natural self-trimming at high-lift altitudes, and improved low-speed handling characteristics. The Langley HL-10 (horizontal-lander, design 10) was the result some 18 months later after extensive analytical and wind tunnel work. A large scale piloted version started flights at Edwards in December of 1966. Two versions of the Ames M-2, the M2-F1 and M2-F2, and the Air Force's SV-5P (X-24A) were also flown successfully in the Edwards program. Thus it was apparent beyond any further doubts that with careful design, sufficiently high aspect ratio, and with appropriate stability augmentation and artificial damping, lifting bodies in the hypersonic $L/D \sim 1$ to 1.5 category could be made capable of piloted glide landings.

However, it was also clear from these programs that the low-speed L/D of the lifting bodies was always significantly less than that of winged vehicles similar planform and aspect ratio. This means that their descent rates are higher, and other factors being equal, their approach and landing characteristics are more critical with smaller margins for error than for the winged designs. A principal advertised advantage of the lifting body, increased volume per pound of weight, was found partly illusory, because balance, packaging, and other requirements made a

sizable part of the volume unusable, even in the HL-10. Furthermore the high volume cost something in added heat protection weight. That is, the net weight saving (if any) due to elimination of the wings was less than the weight of the shed wings.

In contrast to the weight "savings" hoped for by the early aerodynamicist promoters of wingless lifting bodies, it had been known since the time of "Phase α" (1960) that the bodies were always heavier than winged vehicles of the same hypersonic L/D. In "Phase α" an M-2b body of L/D $\sim$ 1.3 was found to weigh 9391 lb at orbital injection, while a strictly comparable winged vehicle weighed only 8590 lb. These careful estimates were made by qualified specialists from four aerospace firms. (Ref 20).

The Winged Space Shuttle

With the successful flights of the small piloted lifting-body vehicles at Edwards, and with winged reentry systems having been dormant since 1963, it was naturally assumed by the lifting-body promoters that the Space Shuttle would employ one of their products. It came as a shock to them when the series of system studies starting in 1969 (Ref. 28) revealed that the Shuttle would have to be a winged configuration basically similar to Dyna-Soar but some 20 times heavier. The enormous cargo bay demanded for the anticipated payloads, 60 feet long and 15 feet in diameter, was practically impossible to fit into any reasonably proportioned lifting body. The higher hypersonic L/D of the winged design was needed for cross range. The wing also provides a higher reentry trajectory, shielding of the fuselage, better handling qualities, and extra margins for safety in approach and landing. The prospect of the "dead-stick" landing from space of this 180,000 lb. behemouth was far less fearsome and less risky with the extra aerodynamics of the wing.

Our basic 1958 postulate used in promoting the many advantages of winged reentry - that the modest weight increment of the wings would cease to be a critical consideration after booster technology advanced beyond its embrionic stage - was now amply confirmed.

In addition to enormous advances in booster technology, the Shuttle enjoys a thermal protection system far more effective and more durable than the metallic radiative structure of Dyna-Soar. In essence its lightweight ceramic blocks are the "unobtanium" that we could only dream of in the '50's and early '60's. In other sub-systems, however, the Dyna-Soar experience provided a technology base on which Shuttle designers

could build. Virtually all of the reentry configurational and operational principles developed by NACA/NASA in the late '50's and applied in Dyna-Soar are followed in the Shuttle.

Tom Wolfe has discussed the winged Shuttle and its relationships to the previous research aircraft and space capsules from the point of view and emotional reactions of the Edwards airplane test pilots (Ref. 29). Their personal satisfactions on the realization of this flyable winged aircraft/spacecraft are shared by the researchers and engineers who visualized the possibilities and developed much of the underlying technology some 20 years before the first flight of the Shuttle.

References

1. PARD proposal document, "Hypersonic Research" transmitted to Langley management June 5, 1953.

2. Brown, C. E., et al, A Study of the Problems Relating to High-Speed, High-Altitude Flight, Langley Memo, June 25, 1953.

3. Becker, J. V., The X-15 Program in Retrospect. Raumfahrtforschung, March/April, 1969.

4. Becker, J. V. The X-15 Program. Part 1: Origins and Research Background. Astronautics & Aeronautics, Feb. 1964.

5. "NACA Views Concerning a New Research Airplane." NACA, Washington, Aug. 23, 1954.

6. Eggers, A. J., Allen, H. J., and Neice, S., A Comparative Analysis of the Performance of Long Range Hypervelocity Vehicles, NACA RMA54L10, 1954.

7. Hypersonic Research Airplane Study. Memo for Assoc. Director, Jan. 17, 1957, J. V. Becker.

8. Korycinski, P. F., Note to John Bailey dated Jan. 25, 1957, (Copy attached. The presentation charts referred to are Fig. 1, taken from Ref. 7).

9. Preliminary Investigation of a New Research Airplane for Exploring the Problems of Efficient Hypersonic Flight. By the Staff of the Ames Aero. Lab., Jan. 18, 1957.

10. First Meeting of Steering Committee on New Research Airplanes Feb. 14, 15, 1957. Memo RAPL to NACA Hq., Mch. 5, 1957.

11. Supplemental Report for Ref. 9 above. By the Staff of the Ames Aero. Lab., May 17, 1957.

12. "NACA Views on a Hypersonic Research Airplane." NACA, Washington, July 23, 1957; Revised version, Sept. 8, 1957.

13. Korycinski, P. F., Report on Interlaboratory Round III discussions. Memo for RAPL dated Nov. 1, 1957.

14. Material presented at Round III Meeting. Folder in J. V. Becker files, 1957.

15. Syvertson, C. L., A Short History of Lifting Bodies. NACA document evidently prepared at E. O. Pearson's request in 1967. (See JVB copy.)

16. NACA Let. Crowley to Reid 11/18/57.

17. Becker, J. V., and Korycinski, P. F., The Surface Coolant Requirements of Hypersonic Gliders. NASA Memo. Report 1-29-59L, April, 1959.

18. Cooper, P. A., and Holloway, P. F., The Shuttle Tile Story. Astronautics and Aeronautics. Vol. 19, No. 1, Jan. 1981.

19. Becker, J. V., Reentry from Space. Scientific American, Jan. 1960.

20. USAF/NASA Joint Conference on Lifting, Manned, Hypervelocity and Reentry Vehicles. Compilation of Papers Presented. Langley Research Center. April 1960.

21. NACA Conference on High Speed Aerodynamics. Compilation of Papers Presented on March 18, 19, and 20, 1958. Paper No. 4, p. 45-58, J. V. Becker.

22. Dyna-Soar briefing for Webb, Dryden, and Seamans on Jan. 4, 1962. Langley Res. Center Files.

23. Eggers, A. J., Some Considerations of Aircraft Configurations for Long-Range Hypersonic Flight. Paper presented at Symposium on Hypersonic Flow, U. of Bristol, England Ap. 6, 1959.

24. Report of the Aero and Space Vehicles Panel of the SAB on Dyna-Soar, Jan. 1960, USAF HQ Files.

25. Becker, J. V., A Hindsight Study of the NASA Hypersonic Research Engine Project. Unpublished study for NASA/OAST Propulsion Division, 1976.

26. Becker, J. V., Entry Vehicles, Astronautics and Aerospace Engineering, Nov. 1963, AIAA.

27. Becker, J. V., Notes on the Evolution of "Lifting-Body" Manned Reentry Vehicles. Review prepared for NASA/OAST Space Vehicle Office, Dec., 1967.

28. Hallion, Richard P., The Antecedents of the Space Shuttle. XXXth Congress, IAF, Sept. 21, 1979.

29. Wolfe, Tom, Columbia's Landing Closes a Circle. National Geographic, Vol. 160, No. 4, Oct. 1981.

Fig. 1. Results of calculations made in early 1957 showing weight superiority of Langley's flat-bottomed configuration over the flat-top advocated by Ames. From the heating analysis of Becker and Korycinski and thermal-protection weight estimates of Roger Anderson and others in the Structures Division. The flat-bottomed concept was later adopted in conceptual reentry designs and the Dyna-Soar and Space Shuttle vehicles.

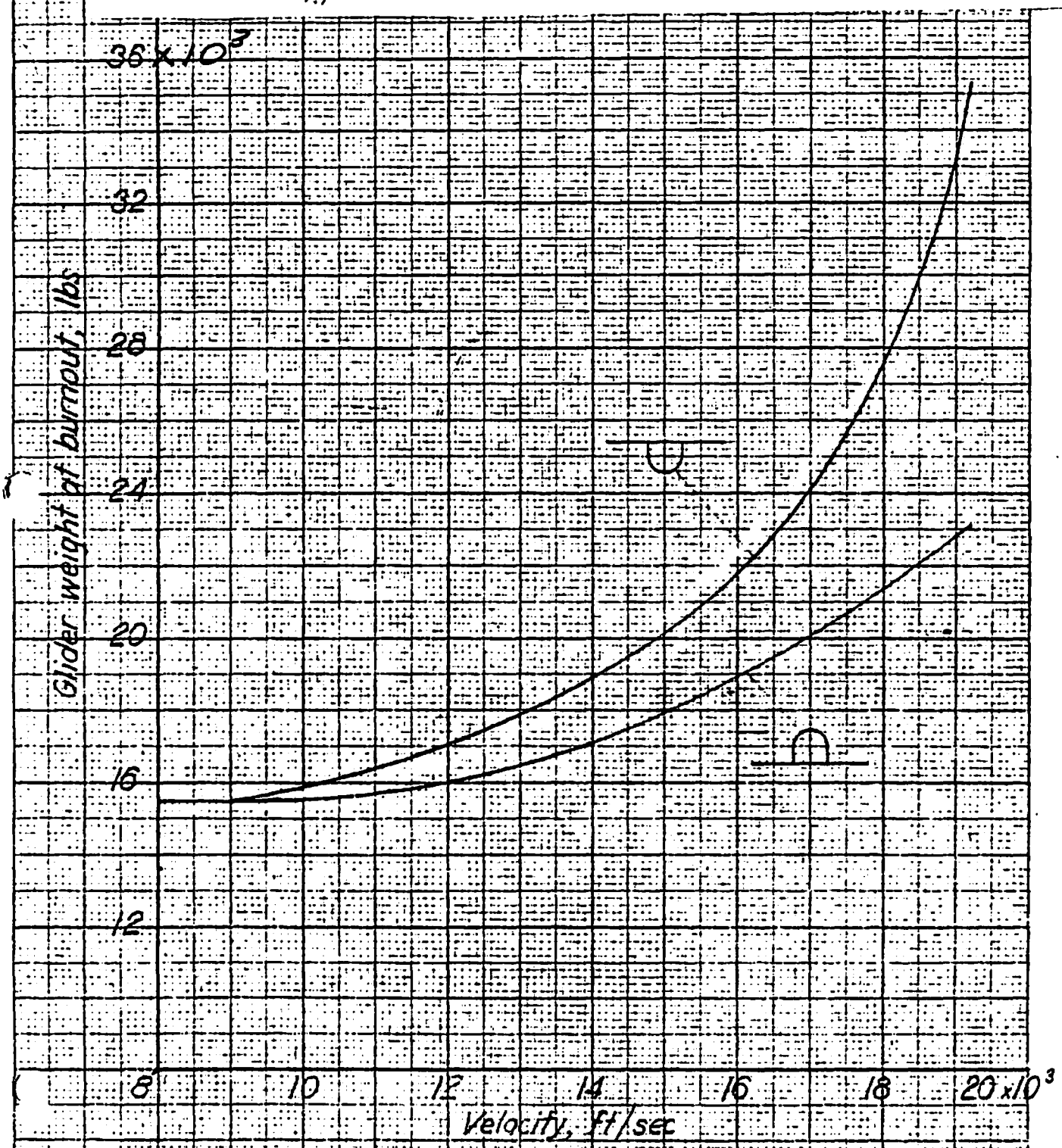

Variation of glider weight with design speed; W/S = 20, turbulent boundary layer, $T_{max.}$ = 1800°F, ε = 0.9

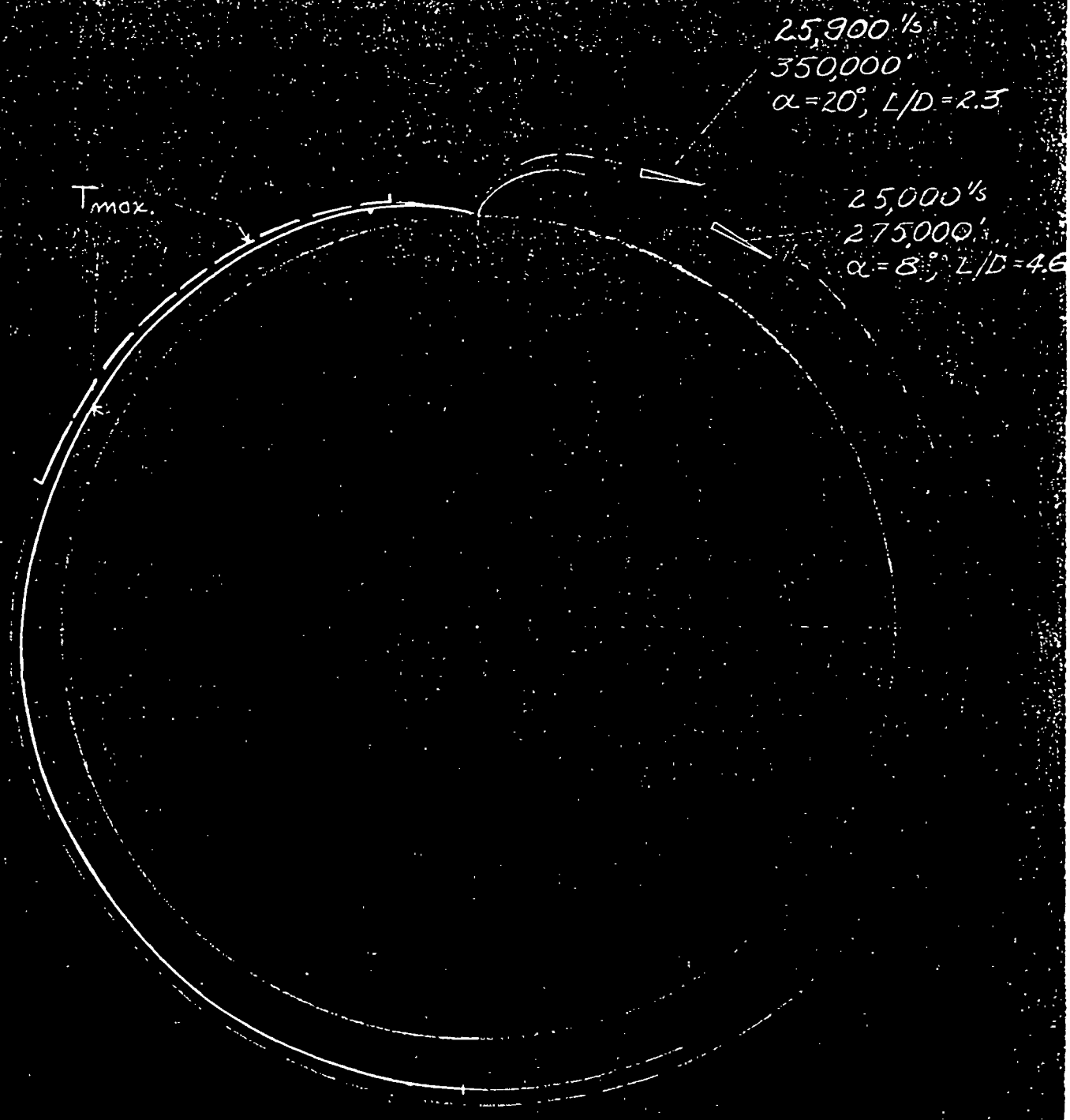

	L/D = 4.6	L/D = 2.3
$T_{max\ skin,\ turb.}$	2100 °F	1900 °F
$T_{LE,\ Uncooled,\ 1/2°D.}$	6000 °F	4800 °F
LE COOLANT	100 #/ft. sp.	22 #/ft. span

Fig. 2. Chart developed in Langley HYWARDS study for presentation to Langley management on Jan.11,1957, showing heating alleviation for global-range glides by operation at high angle of attack and reduced L/D.(See Ref.8)

	LANGLEY		AMES		HSFRS	
	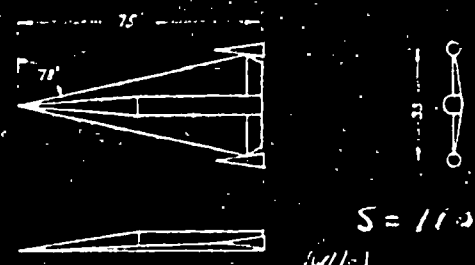		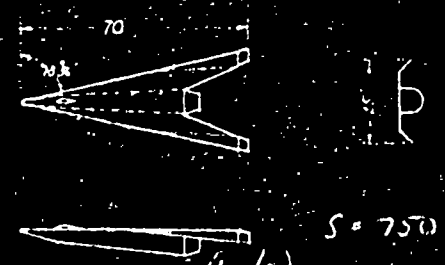			
	S = 1100 ft²		S = 750 ft²			
	$(W/S)_{sl.d.}$ = 19.6		$(W/S)_{gide}$ = 20			
Booster Arrangement	Side-by-side		Tandem			
Launch - Air	B-36 M=.6		B-36 M=.6		M=2 @ 30,000'	
Ground	Vertical		Vertical		Runway take-off	
	2nd Stage	1st Stage	2nd Stage	1st Stage	Air	Ground
Performance						
Velocity, ft/sec	14,800	7,000	11,000	5,000	M=15	M=12
Altitude ft			135,000	110,000		
Range, n.mi.	3200	500	2000	400	2800	
Weights						
Gross	234,400	64,500	110,000	33,000		
1st stage	64,500		33,000			
Propellants	155,000	43,000	72,000	18,000		
Burnout	14,900	21,500	15,000	15,000		
Power Plant						
Rocket motor	(2) XLR89-NA-1	XLR99-RM-1	XLR89-NA-1	XLR99-RM-1	Ram-jets and rockets	
Thrust/motor	150,000	57,000	150,000	57,000		
Total thrust	300,000	57,000	150,000	57,000		
Propellants	LOX + RP-1	LOX + NH_3	LOX + RP-1	LOX + NH_3		
Structure						
Limit temp. °F	1800		1600			
	Internally-cooled load-bearing structure plus insulation plus internally-cooled protective outer shell - 2200 lbs of Helium		Internally-cooled - 1200 lbs of Water			

Fig. 3. Comparison of the initial Ames and Langley boost-glide

Effect of speed on the relative importance of L/D. 4

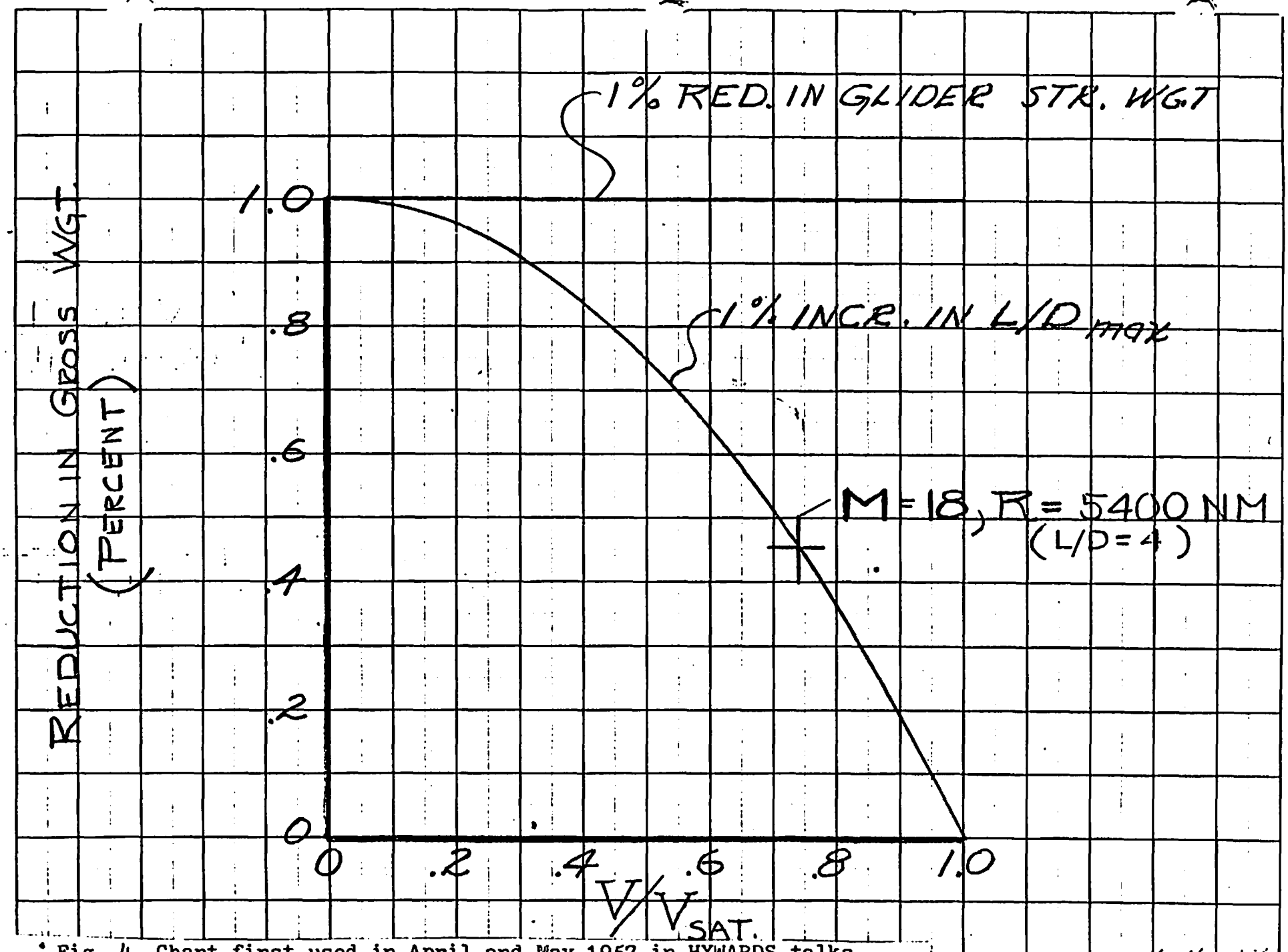

Fig. 4. Chart first used in April and May 1957 in HYWARDS talks at Langley to show the decreased relative importance of L/D at high hypersonic speeds, and the constant importance

GLOBAL TRAJECTORIES

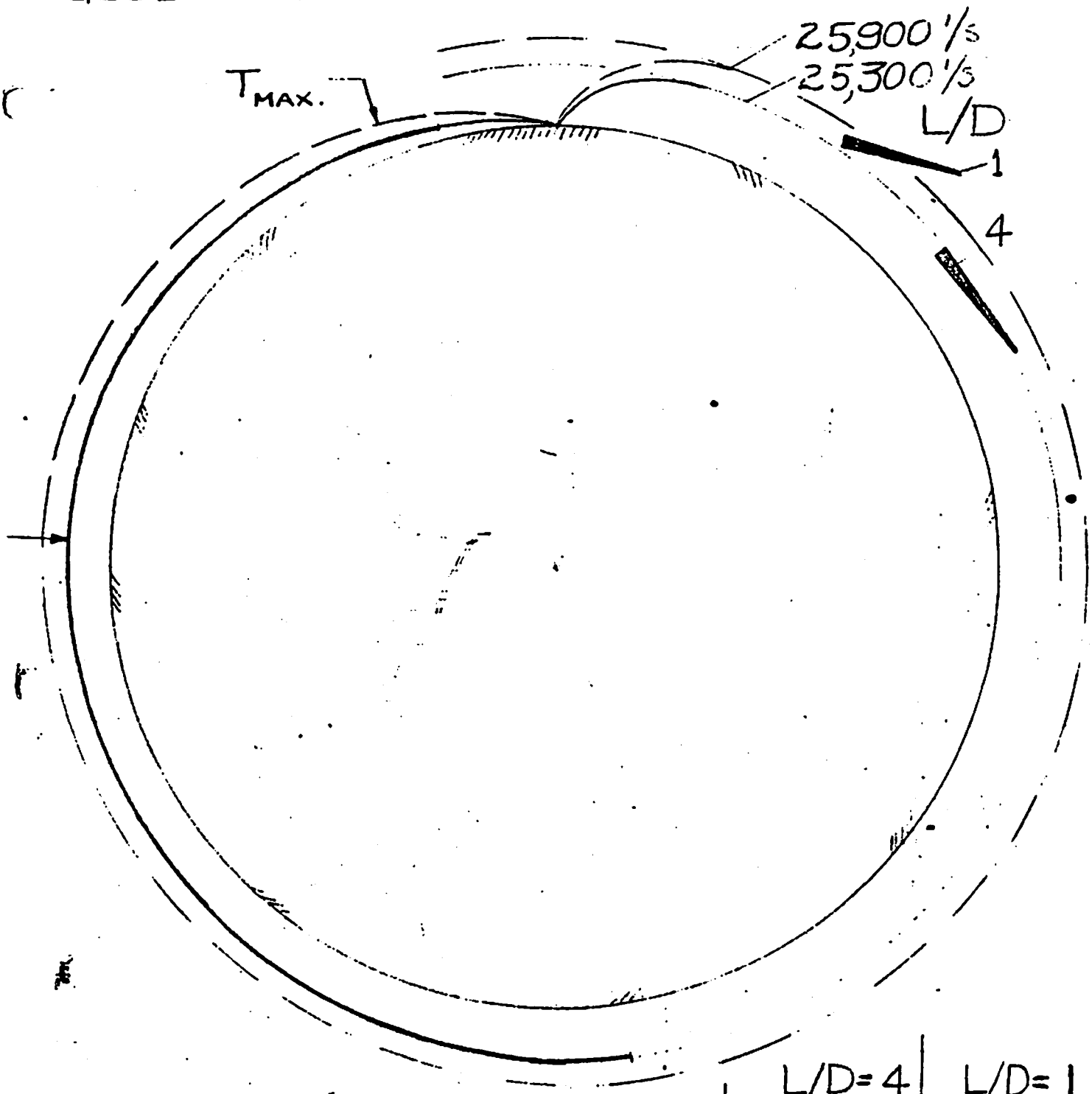

	L/D=4	L/D=1
MAX. SKIN EQ. TEMP.	2100 °F.	1800 °F
MAX. L.E. EQ. TEMP.	3800 °F.	2700 °F
L.E. COOLANT/FT. SPAN	100 LB	9 LB

Fig. 5. Langley chart dated May 1,1957, extending the idea of high-angle-of-attack operation to maximum lift ($\alpha \sim 45°$, $L/D \sim 1$) for global-range flights. Most of the range is covered on the outer fringe of the atmosphere at low heating rates; peak deceleration and heating occur near the end of the trajectory. Skin temperatures and coolant requirements greatly reduced in comparison to the high-L/D flight.

FIG. 6

COMPARISON OF EQUAL-WGT. SYSTEMS

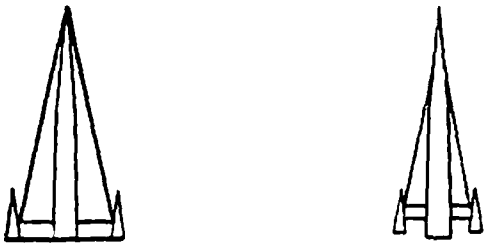

GLIDER		
S_W	1174 □'	587 □'
W_o	20,700 #	16,700 #
W_{fuel}	45,000	49,000
$W_{tot.}$	65,700	65,700
W_{tot}/W_o	3.17	3.93
T/W_o	2.76	3.43
ΔV	9400 '/s	11,150 '/s
BOOSTER		
W_{tot}	274,300 #	274,300 #
ΔV	8600 '/s	8600 '/s
SYSTEM		
W_{tot}	340,000 #	340,000 #
V	18,000 '/s	19,750 '/s
L/D	4.2	3.8
RANGE	4,700 nm	5600 nm.

Fig. 6. Chart used in Round III summary talk by J.V.Becker showing how the Langley glider could achieve increased range by L/D reduction through use of a smaller wing, and emphasizing the need for optimization analyses of both the Ames and Langley vehicles. Ref 14.

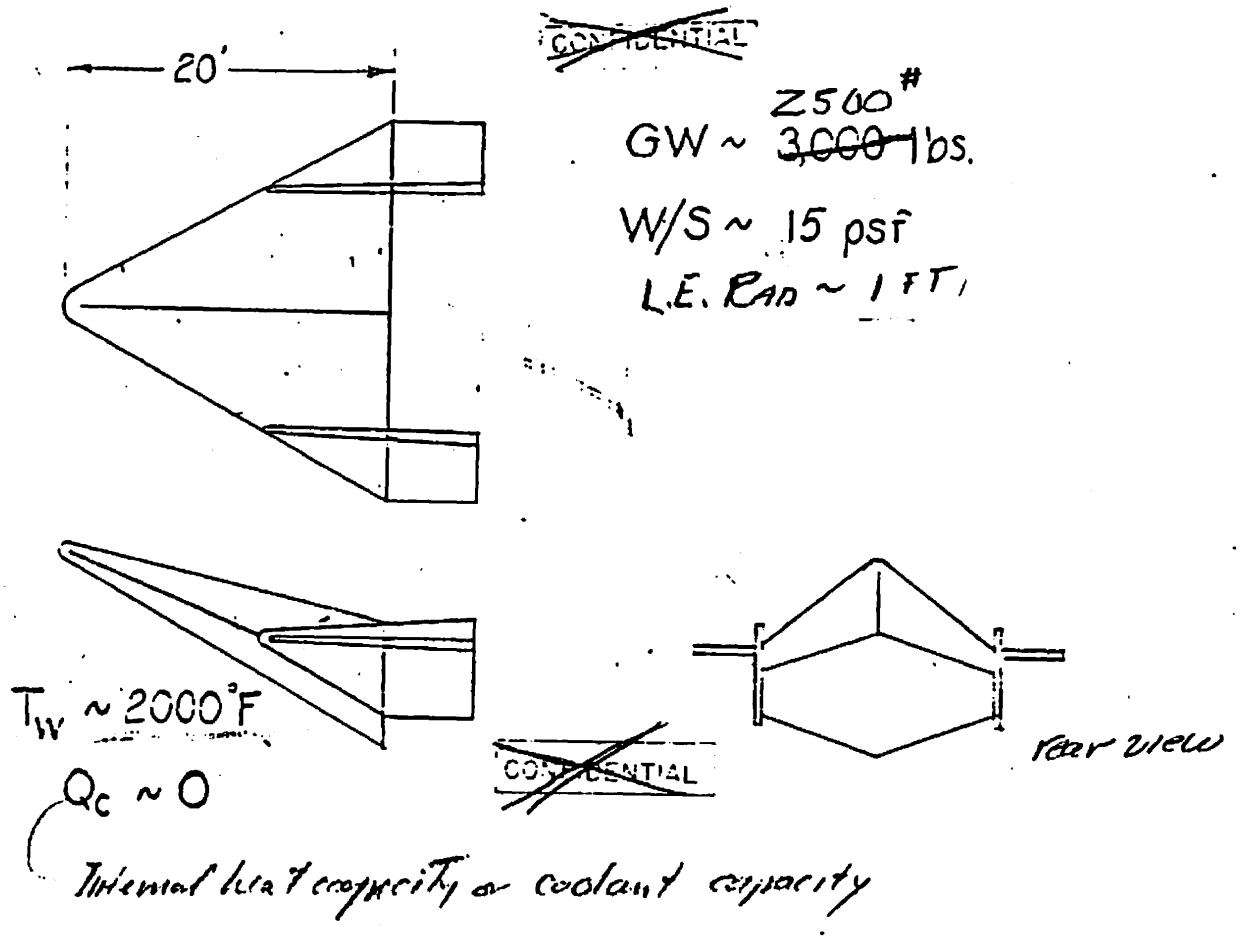

Fig. 7. Minimal manned reentry vehicle concept sketched for use of J. Stack in November, 1957. This was the first crude attempt to apply the ideas for eliminating internal coolant in a practical design using high-temperature metallic structure. See Ref. 17.

Fig 8

Fig. 8. The manned satellite hicles proposed by Industry in USAF's "Man-in-Space-Soonest" study. Summary compiled at Contractor's presentations at WP-AFB in late January 1958.

	LOCK.	MARTIN	AERO-NEUT.	McDON.	AVCO	GOOD-YEAR	CONV'R	BELL	NAA	REPUB.	NORTH'P.
MIN. MANNED SATELLITE	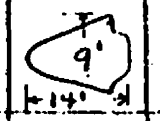		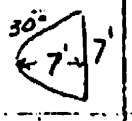	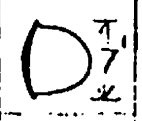			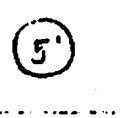	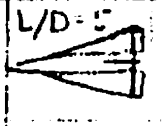	X-15B STRIPPED	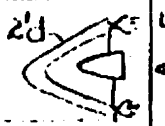	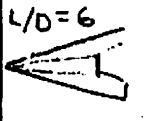
WGT. LB.	3000	3500	2545	2400	1500	2000	~1000	18,000	~10,000	4000	11,000
BOOSTER	ATLAS + HUST.	TITAN	ATLAS + HUST.	ATLAS + POLARIS	TITAN	A OR T + 3RD ST.	ATLAS + HUST.	=	4 G-26 + XLR-99	ATLAS + POLARIS	
ORBIT	150-300 3 REV	150 m. ~1 DAY	—	100 m. 1 REV.	120 m. 1 WEEK	200-400 5 DAYS	170 mi —		—	100-150	
* TRACKING	—			"MINITRACK" SYST.							
* ORBIT CONTROL	RETRO. ΔV=200 FT/SEC	RETRO. ΔV=500 '/s	RETRO.	RETRO	VAR. DRAG	RETRO. ΔV=800 '/s	RETRO. ΔV		VARY L/D	ΔV=65 + VAR. L/D	
ATTITUDE CONTROL	ROCKET + EL. MOTOR	ROCKET	—	ROCKET	CHUTE	—	—		ROCKET + PILOT FLY AIRP.	ROCKET	
PILOT FUNCTIONS	NONE	NONE	NONE	NONE	NONE	NONE	?			MONITOR	
MAX. DECEL.	~8g	8-15g	—	8.5g	7-9g	—				"low"	
STRUCT. TYPE	ABLATION OR BERY.	ABLAT.	GRAPHITE HT. SHIELD	HT. SINK (BERYL)	RADIATION (MOLY OR THO)	ABLAT.	—		BEO + RENE 41	INCONEL	
SAFETY	EJECT CAPSULE AT LAUNCH	EJECT AT LAUNCH	EJECT AT LAUNCH	POLARIS + CHUTE	EJECT TO 3000', CHUTE	EJECT AT LAUNCH	—		?	—	
W/C_DA #/SQFT	100	100	61	60	1.5	50	50		W/S=50	W/S=26	
LANDING AREA, MI:	400 x 20	100 x 100	100 x 50	400 x 400	"KANSAS" 400 x 200	800 DIA	—		—	—	
TIME TO MANNED FLT.	2 YR.	2½ YR	6 YR.	2 YR	2½ YR	2 YR	1 YR	5 YR	2½ YR	1¾ YR	—
COST, MILLIONS	10-100	—	—	—	40	100		889	120 (3 AIRP.)		

"DYNA SOAR" APPROACH. "WINGLESS WOULD BE ONLY A STUNT"

"DYNASOAR" APPROACH

* All non-winged designs use zero-C_L reentry with no flight path control. Winged designs have complex ground controlled systems monitored by pilot.

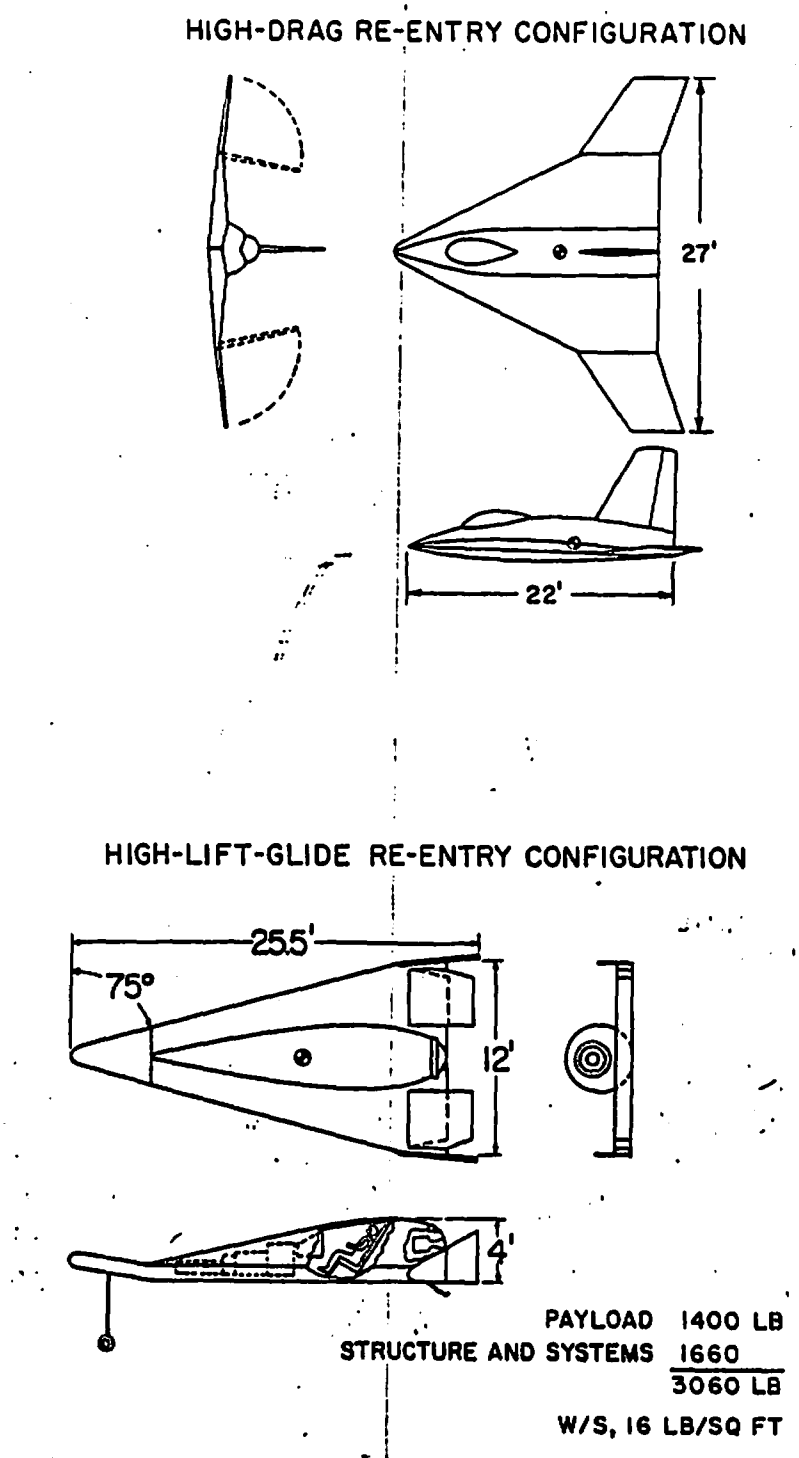

Fig.9. Conceptual winged reentry vehicles discussed in Fig.10 of paper No.4 of Ref.19. The lower design embodies all of the Langley-developed features for minimizing heating and allowing metallic structures with zero coolant.(Ref.17)

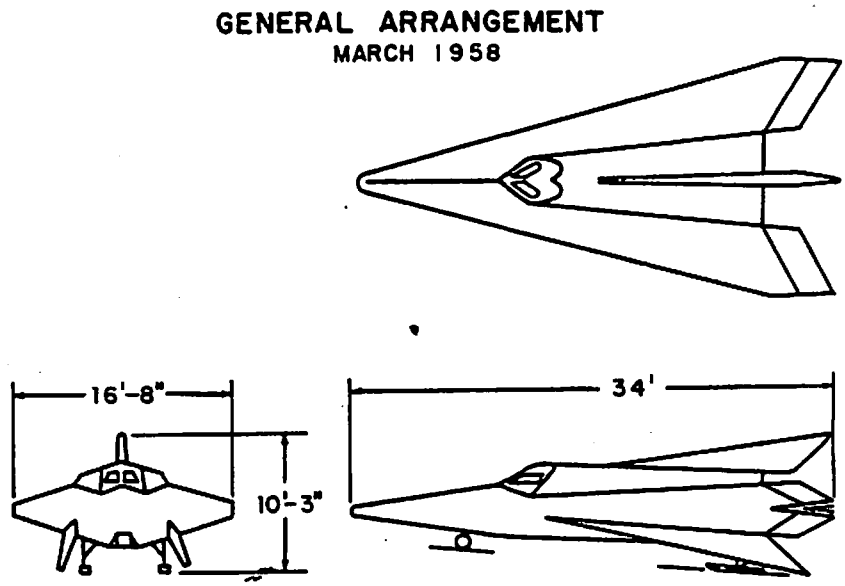

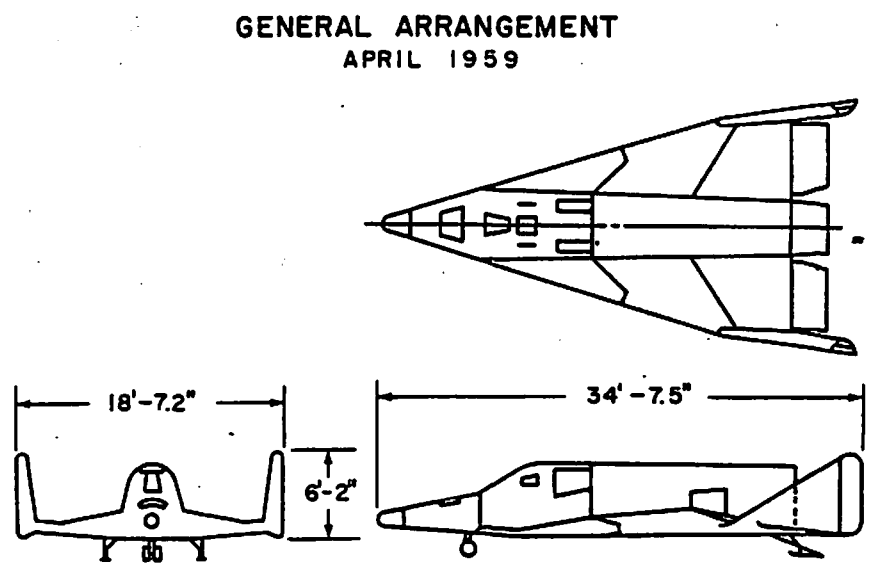

Fig.10. Charts No.4 and 8 of Boeing paper by R. Rotelli in Ref.21 showing the changes in their Dyna-Soar configuration from their original proposal of March, 1958 to the design of April, 1959 which incorporates all of the major alterations proposed by the Government on the basis of the NACA/NASA recomendations of Ref.19.

KEUFFEL & ESSER CO. N.Y.

GLIDE CORRIDOR - RES. TEST CONSIDERATIONS

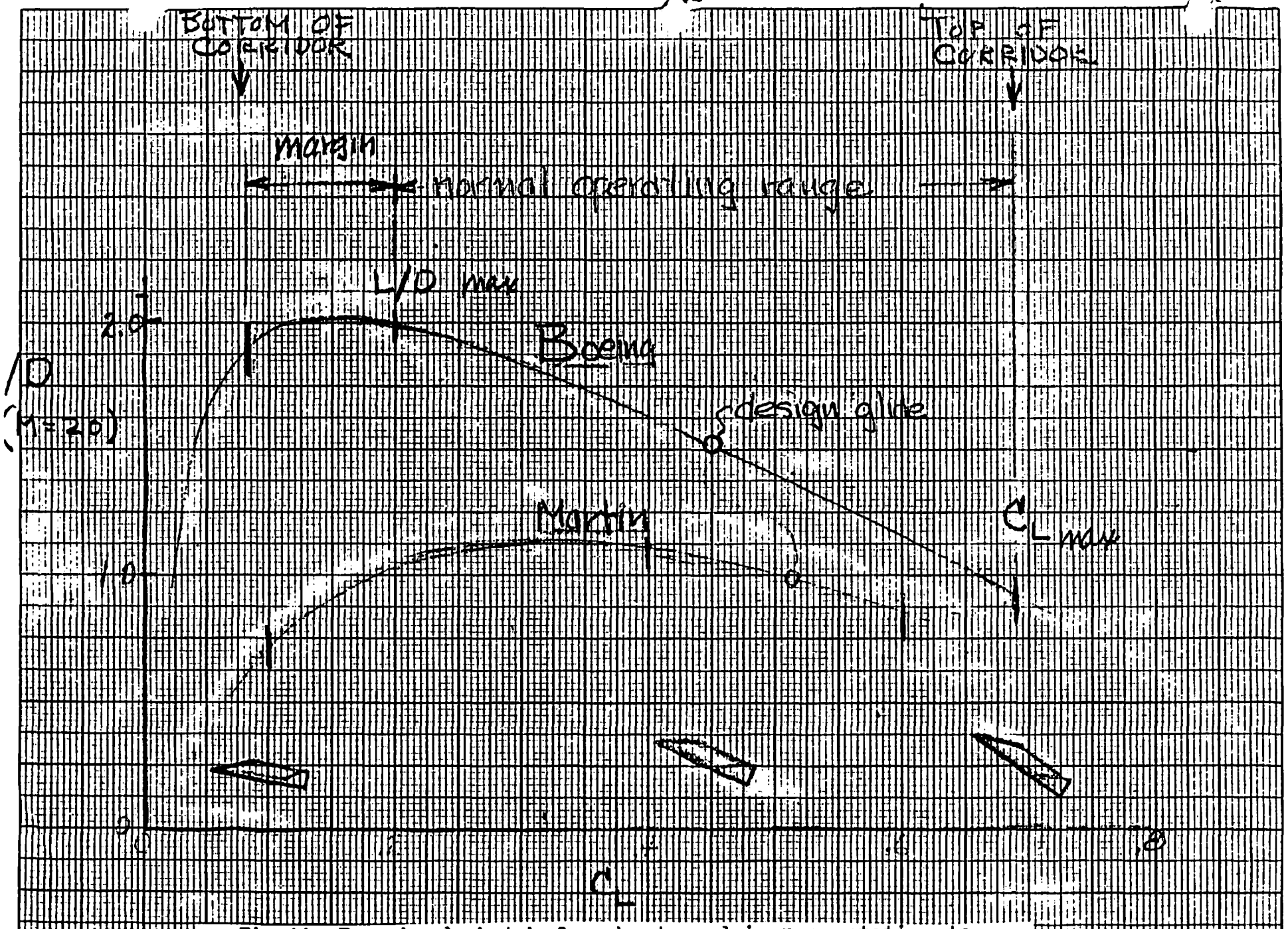

Fig.11. Free-hand sketch for chart used in presentation to Dyna-Soar Source Selection Board showing the generally broader capabilities of the Boeing glider for corridor

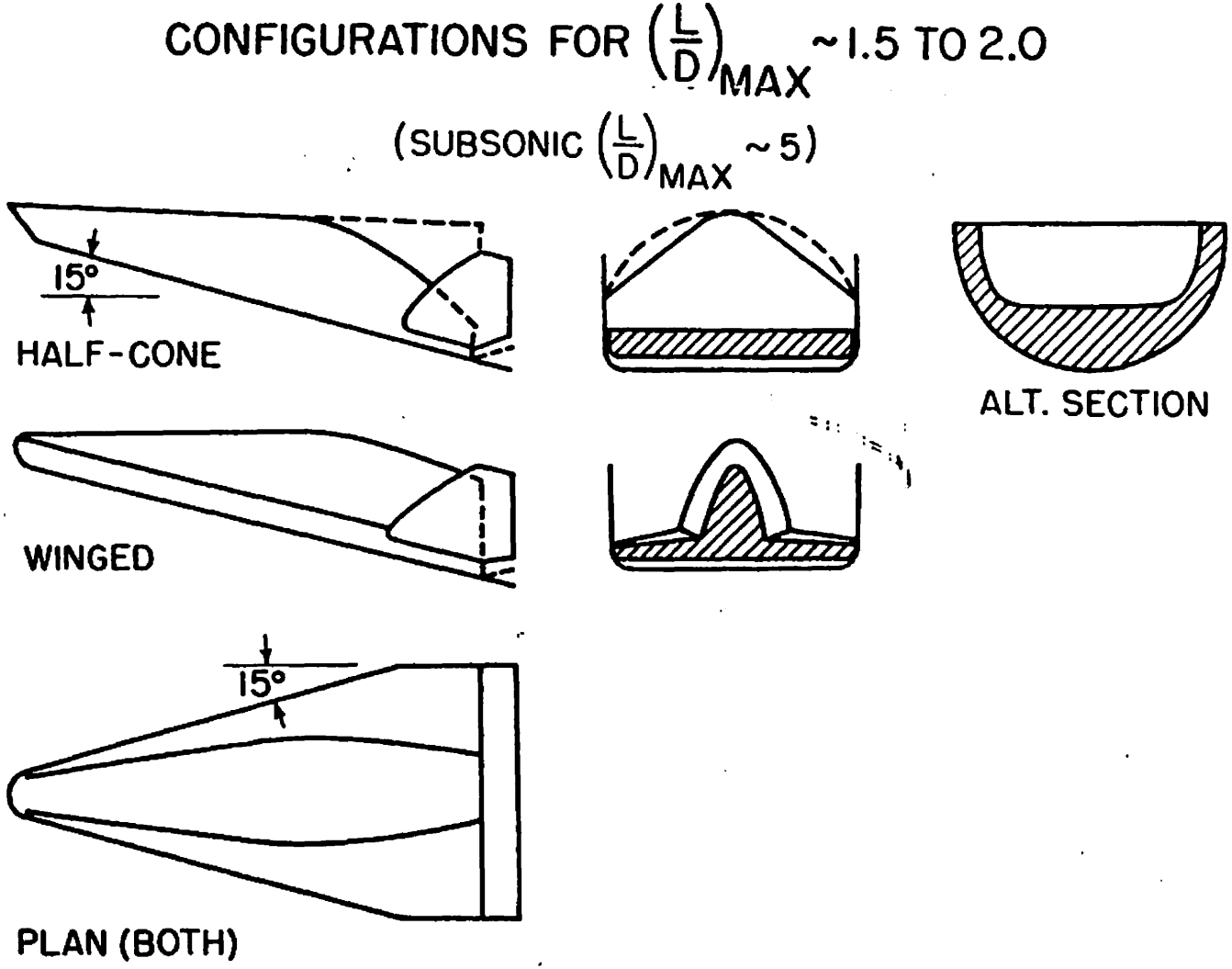

NASA L-1354-8' BECKER 12-2-59

Fig.12. Chart used in NASA presentation at SAB meeting of Dec.2-4 to compare the conceptual Dyna-Soar wing-body with comparable lifting bodies of the same planform. Data were available for wing-bodies indicating L/D 2, hypersonic, and 5, subsonic. The lesser performance of the lifting bodies was estimated as approximately L/D 1.5, hypersonic, and 3, subsonic.

ADVANCED FLIGHT EXPERIMENTS IN
HYPERSONIC AERODYNAMICS AND HEATING

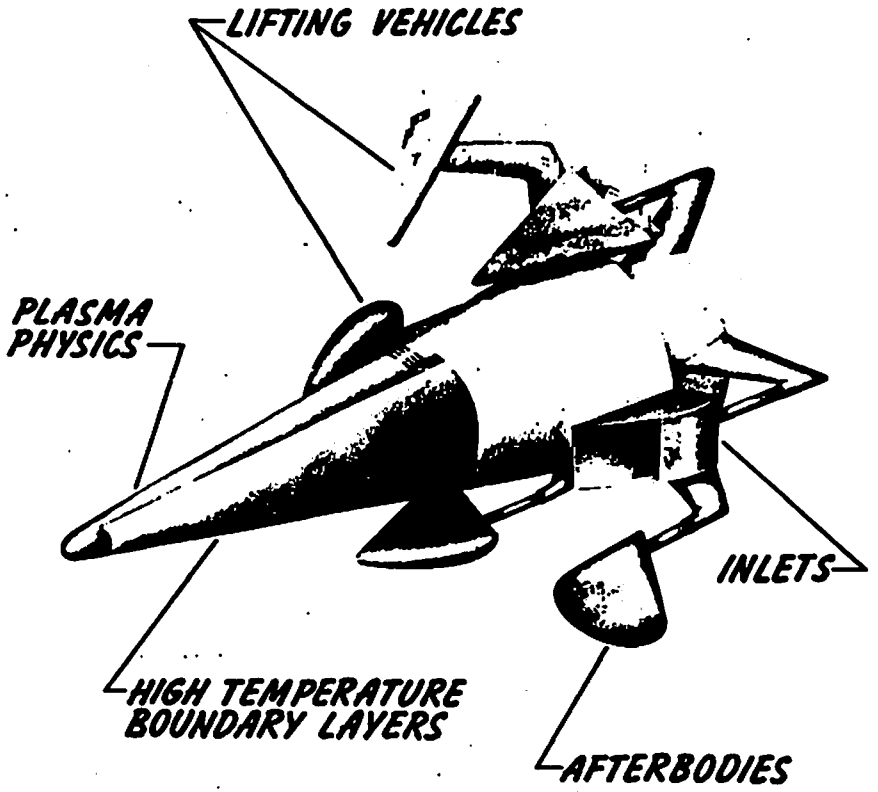

Fig.13. The proposed RVX-2 aerodynamics/heating payload configuration developed by C.H.McLellan's Langley group in 1961.

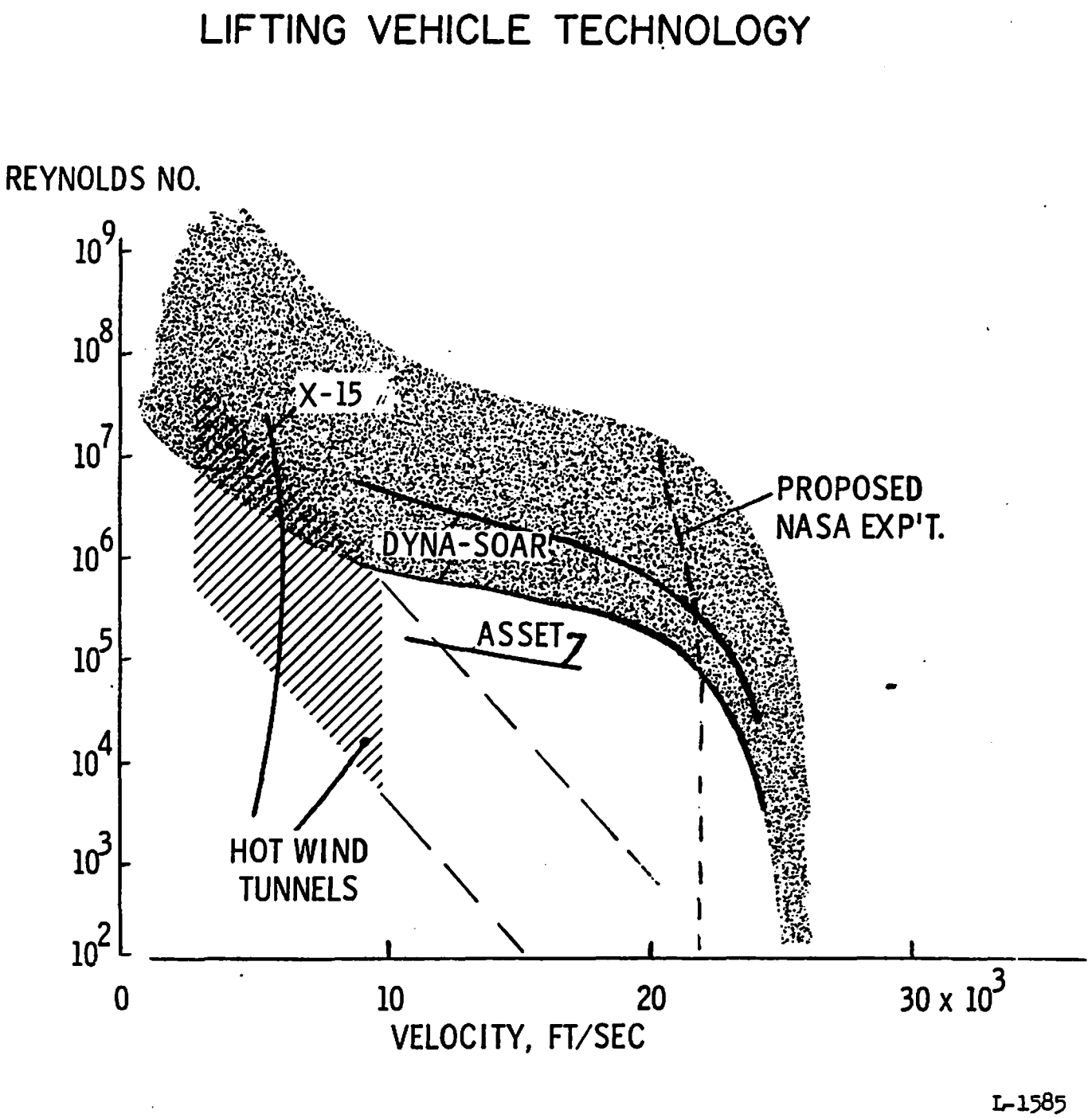

Fig.14. Environmental comparisons for the RVX-2, other flight test systems, and ground-based facilities.

CONFIDENTIAL

NASA PARTICIPATION IN DYNA SOAR
APRIL '58 to JAN '61

Apr. 1958 *Evaluation*
Dec. 1958 *SAB review*
Apr. 1959 *Evaluation*
Dec. 1959 *SAB review*
Jan. 1960 *Phase Alpha study*
Mar. 1960 *SAB review*
Apr. 1960 *DS conference*
Aug. 1960 *RVX-2 added to DS*
Nov. 1960 *DS-NASA plan for RVX-2*
Dec. 1960 *SAB review*

} *Heavy* NASA *participation*

L-1379

Fig.15. Charts used in Dyna-Soar briefing of Jan.4,1962 for NASA Administrators Webb, Dryden, and Seamans. (a) period up to Jan.,1961.

PERIOD OF JANUARY 1961 TO DECEMBER 1961

- Studies of space operations of DS (Rendezvous, multiple orbits, etc.)
- Aerospace Corp. studies of new DS configurations, structural approaches, etc.
- Formal evaluations of above concepts
- Project "Streamline" study and evaluations thereof
- Study of Mercury Mark II as substitute for DS
- Booster studies
- Selection of Titan III Booster
- Two SAB reviews of above studies
- Abandonment of step approach
- Removal of RVX-2 from DS

No NASA Participation

L-1376

15(b) 1961 to 1962.

~~CONFIDENTIAL~~

MANAGEMENT SUMMARY

1. NASA support to DS currently involves about 55 personnel continuously

2. NASA has utilized its wind tunnels for DS for 3900 hrs

3. Although the AF is considering a fundamental redirection of the program, the working level has to continue under the current directive; AF asks NASA for support in areas of tests that will probably be abandoned

4. AF has essentially eliminated NASA from policy decisions

L-1381

Fig.16. Presentation of Jan.4,1962. Management Summary

CONFIDENTIAL

TECHNICAL SUMMARY

1. *Exploitation of winged-configurations is an essential part of a balanced space program.*

2. *Deletion of build-up flights to 22,000 fps from the DS program increases the risk of failure.*

3. *The RVX model tests should remain in the program.*

4. *Saturn is the only booster system that would give DS orbital capabilities by 1964.*

L-1380

Fig.17. Presentation of Jan.4,1962. Technical Summary.

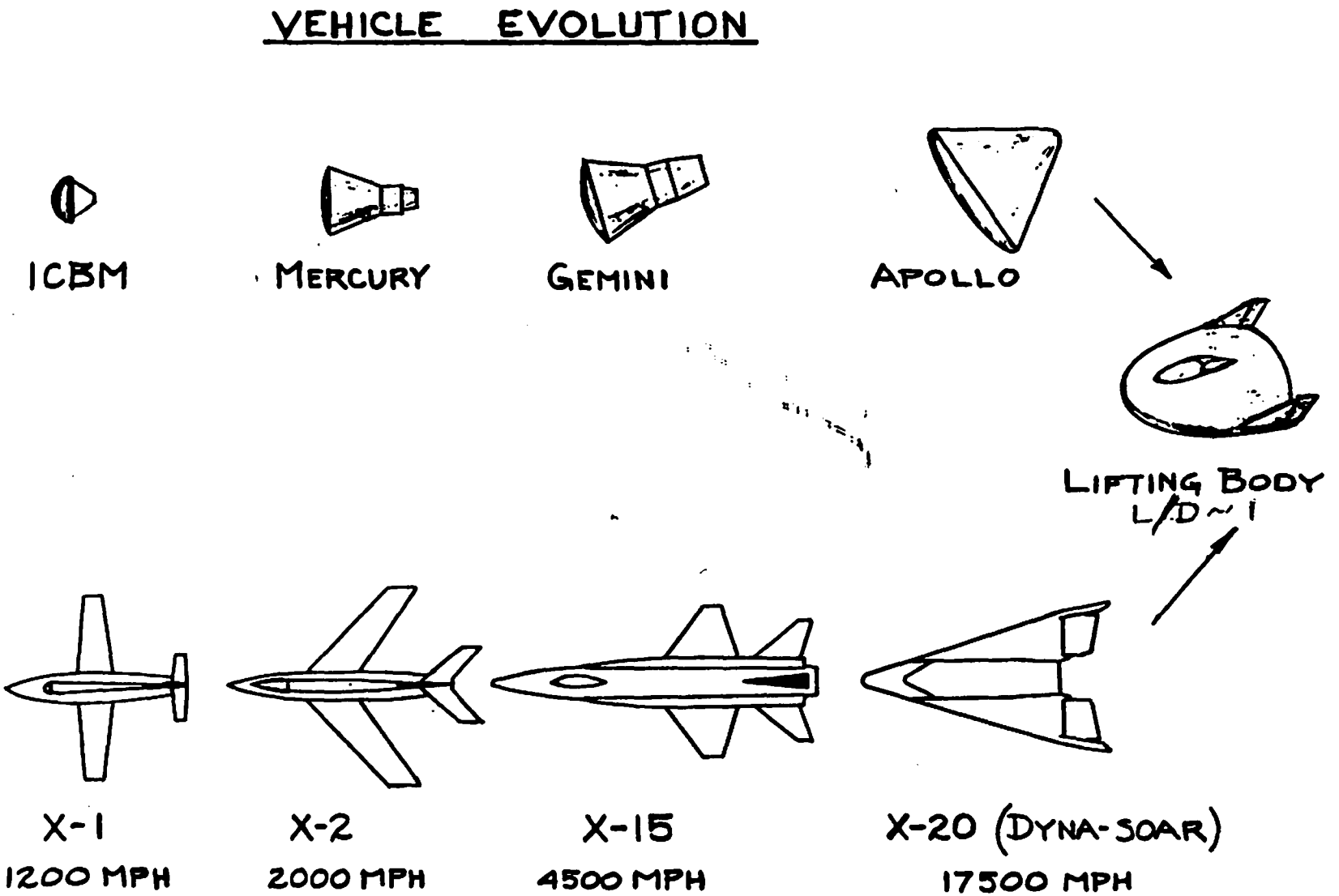

Fig.18. Pictorial vehicle evolution showing the contributions of both aircraft and missile technologies to manned reentry vehicles. 1963 chart.

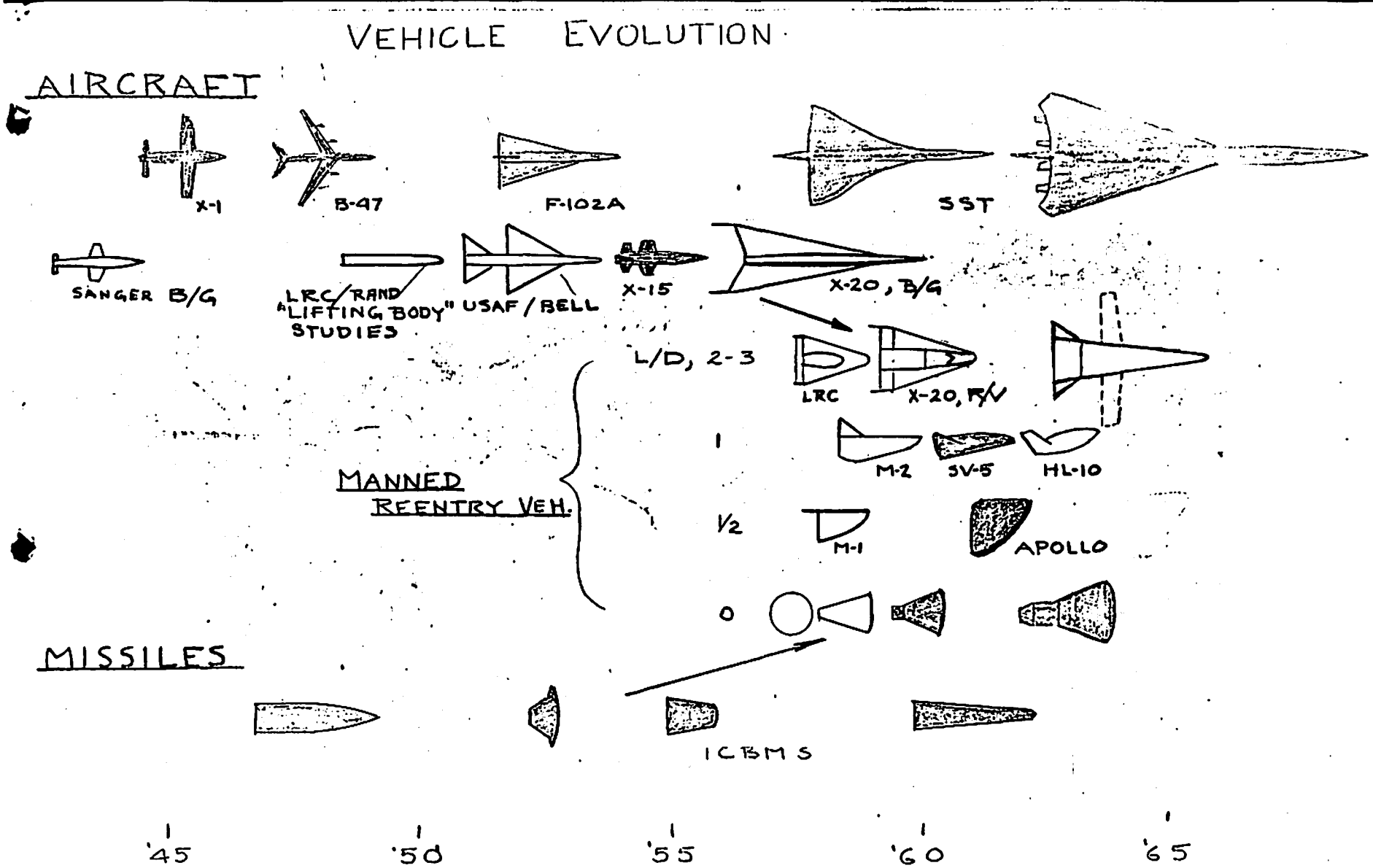

Fig.19. Vehicle evolution. 1967 perspective.

- ACTUAL FLIGHT VEHICLES